Mimaki™

CG-FXII Series

Cutting Plotter

CG-75FXII CUTTING PLOTTER
CG-75FXII Plus CUTTING PLOTTER
CG-130FXII CUTTING PLOTTER
CG-130FXII Plus CUTTING PLOTTER
CG-160FXII CUTTING PLOTTER
CG-160FXII Plus CUTTING PLOTTER

Operation Manual

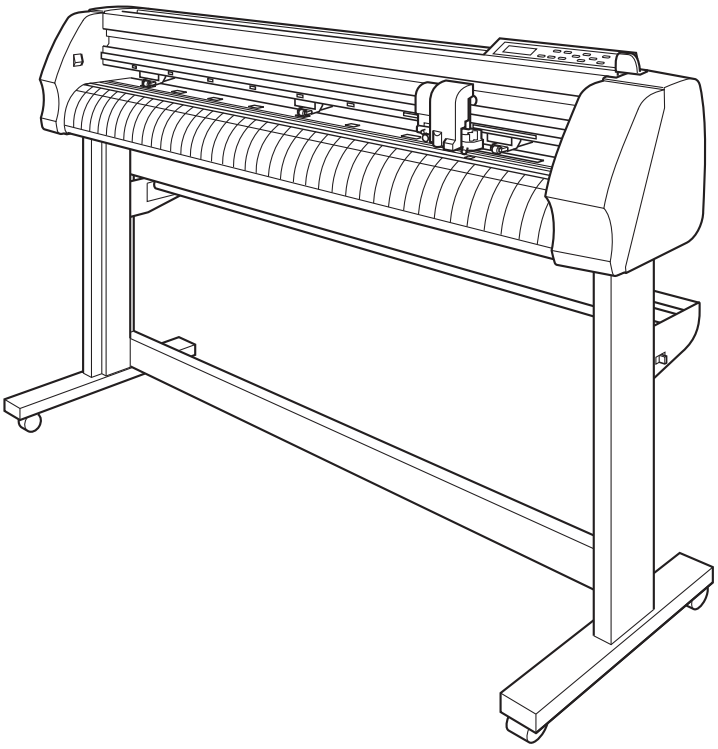

MIMAKI ENGINEERING CO., LTD.
URL: https://mimaki.com/

D201812-34

Caution

DISCLAIMERS

- MIMAKI ENGINEERING REJECTS ALL LIABILITY FOR DAMAGE ARISING DIRECTLY OR INDIRECTLY FROM THE USE OF THE CG-FXII ("THIS MACHINE" HEREINAFTER), WHETHER OR NOT THE PRODUCT IS FAULTY.
- MIMAKI ENGINEERING REJECTS ALL LIABILITY FOR DAMAGE, DIRECT OR INDIRECT, TO MATERIALS CREATED WHILE USING THIS MACHINE.
- USING THIS MACHINE IN CONJUNCTION WITH DEVICES OTHER THAN THOSE RECOMMENDED BY MIMAKI ENGINEERING MAY RESULT IN FIRE OR ACCIDENTS. SUCH INCIDENTS ARE NOT COVERED BY THE PRODUCT WARRANTY. MIMAKI ENGINEERING REJECTS ALL LIABILITY FOR DAMAGE, DIRECT OR INDIRECT, ARISING FROM SUCH INCIDENTS.
- USE ONLY GENUINE MIMAKI ENGINEERING TOOLS AND PARTS. USE OF OTHER PRODUCTS MAY RESULT IN FAILURES OR REDUCE CUT QUALITY. SUCH INCIDENTS ARE NOT COVERED BY THE PRODUCT WARRANTY. MIMAKI ENGINEERING REJECTS ALL LIABILITY FOR DAMAGE, DIRECT OR INDIRECT, ARISING FROM SUCH INCIDENTS.

Requests

- This Operation manual has been carefully prepared for your easy understanding, however, please do not hesitate to contact a distributor in your district or our office if you have any inquiry.
- Description contained in this Operation manual are subject to change without notice for improvement.

Important!

* Generally, names and designations referred to in this Operation manual are trade marks or registered trade marks of the manufacturers or suppliers.

Reproduction of this manual is strictly prohibited.
All Rights Reserved. Copyright © 2010 MIMAKI ENGINEERING Co., Ltd.

Interference to televisions and radios

The product described in this manual generates high frequency when operating.
The product can interfere with radios and televisions if set up or commissioned under improper conditions. The product is not guaranteed against any damage to specific-purpose radio and televisions.
The product's interference with your radio or television will be checked by turning on/off the power switch of the product.
In the event that the product is the cause of interference, try to eliminate it by taking one of the following corrective measures or taking some of them in combination.

- Change the orientation of the antenna of the television set or radio to find a position without reception difficulty.
- Separate the television set or radio from this product.
- Plug the power cord of this product into an outlet which is isolated from power circuits connected to the television set or radio.

Foreword

Congratulations on your purchase of a CG-FXII/CG-FXII Plus series cutting plotter.

CG-FXII series cutting plotter is a highly functional cutting plotter with the high-speed registration mark detection.

Read this Operation manual carefully and make the most effective use of your plotter.

Be sure to read this Operation manual carefully, before starting to operate the plotter.

On This Operation manual

- This Operation manual describes the operation and maintenance of CG-FXII/CG-FXII Plus series cutting plotter (hereinafter referred to as the device).
- Please read and fully understand this Operation manual before putting the machine into service. It is also necessary to keep this Operation manual on hand.
- Make arrangements to deliver this Operation manual to the person in charge of the operation of this device.
- This Operation manual has been carefully prepared for your easy understanding, however, please do not hesitate to contact a distributor in your district or our office if you have any inquiry.
- Description contained in this Operation manual are subject to change without notice for improvement.
- In the case where this Operation manual should be illegible due to destruction or lost by fire or breakage, purchase another copy of the Operation manual from our office.

Features

The features of the device are described below. Together with the method of operation of the device explained in this manual, they help you understand how to use the device properly.

Photo electric eye

High accuracy mark-detection sensor enables the mark plotted on sheets to automatically read, compensate distances, set the plotting and compensate paper gradient.

Roll Sheet Stopper Function

The newly developed roll stopper is incorporated so as to set a wide roll paper without sagging.

Two Clamp Pressure Modes Change Over Mechanism

The sheet clamp system has been modified to incorporate two clamp pressure modes change over mechanism so as to widen the applicable sheet size limit.
Strong pressure mode substantially increases the clamp pressure that prevents a long sheet slippage.
The moderate pressure mode prevents from getting scratching by grit roller during plot operation.

New Cutter Holder

The new cutter holder equipping with a capped tip has a mechanism enabling the tip protrusion to adjust by the rotable knob with attaching to the pen carriage. (Former type cutter holders are also usable.)

Front Loading Capability

By installing the roll table at the front side, the roll sheet can be cut by arranging the front loading. (Unsuitable in use of the automatic sheet cutting function.)

Roll sheet settable up to 6 rolls

Up to 6 roll tables attachable to leg assy.

Plug-in cutting software (FineCut) attached

The plug-in software, FineCut enables to perform finely cutting characters or illustration edited on the Illustrator.

Automatic Sheet Cutting Function

Enables to cut a roll sheet or a leaf sheet automatically.

For safe operation

Pictorial signs

Pictorial signs are used in this Operation manual for safe operation of and in prevention of damages to the device. Pictorial signs and their meanings are given below. Read and fully understand before reading the text.

Example of pictorial signs 1

Warning	* Indicates the case where it is assumed that misuse of the machine, ignoring this sign, as this may cause fire or poisoning. Be sure to read this manual for proper operation.
Caution	* Indicates the case where it is assumed that misuse of the machine, ignoring this sign, can cause damage only to property.
Important!	* Indicates a caution you must observe when operating the product.
Hint!	• Indicates helpful information that will facilitate the use of the device.
☞	• Indicates the reference page for related contents.

Example of pictorial signs 2

	The symbol "△" indicates the case where some phenomenon that requires a CAUTION sign (including "DANGER" and "WARNING" signs) exists. A concrete precaution (precaution against an electric shock in the case of the sketch given on the left) is shown in the illustration.
	The symbol "⃠" indicates a prohibited behavior. A concrete illustration of prohibition (disassembly is prohibited in the sketch given on the left) is shown in or next to the illustration.
	The symbol "●" indicates a thing that is forced to be done and instruction that is forced to be followed. A concrete illustration of instruction (the removal of a plug from the receptacle is instructed in the sketch given on the left) is drawn in the illustration.

⚠ Warning

Do not disassemble or remodel the device.

* Never disassemble or remodel the main unit of the plotter.
  Disassembling/remodeling any of them will result in electric shocks or breakdown of the device.

Do not use the device in damp places.

* Avoid damp environments when putting the device into service.
  Do not splash water onto the device.
  High-humidity or water will give rise to fire, electric shocks or breakdown of the device.

Abnormal event occurs.

* If the device is used under anabnormal condition where thedevice produces smoke or unpleasant smell, fire or electric shocks can result. Be sure to turn off the power switch immediately and detach the plug from the receptacle. Check first to be sure that the device no longer produces smoke, and contact a distributor in your district for repair. Never repair your device by yourself since it is very dangerous for you to do so.

Handling of the power cable

* Use the supplied power cable.
* Take care not to damage, break or work on the power cable.
  If a heavy matter is placed on the power cable, heated or drawn, the power cable can break to cause fire or electric shocks.
* Plug the power cable plug into a grounded power outlet. Otherwise there is a risk of failure,electric shock, or fire.
* When installing electrical outlets, perform grounding work to prevent electric shock. All electricalwork (Class C grounding work; formerly Type 3 grounding work) must be handled by a licensedelectrician.

Precautions in installation

⚠ CAUTION	
A place exposed to direct sunlight	A place that is not horizontal
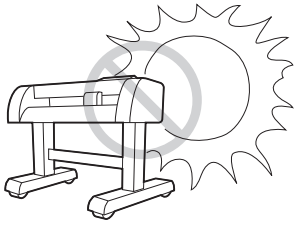	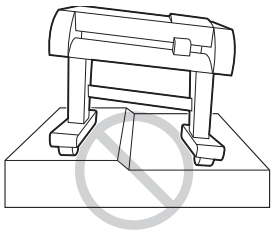
A place in which temperature and humidity vary by a great margin	A place that vibrates
Use the device under the following environment. Operating environment: 20 to 35°C 35 to 65% (Rh)	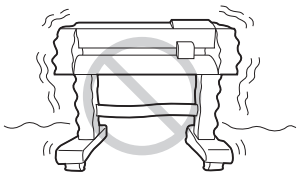
A place exposed to direct air blow from air conditioner, etc.	A place where fire is present
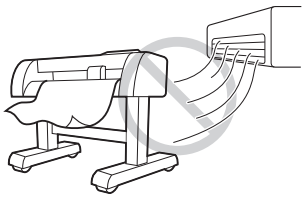	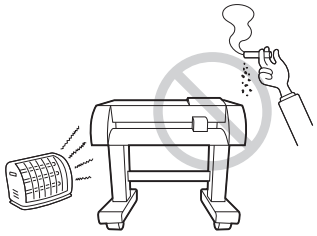

Installation Precautions

⚠ CAUTION
* Avoid installing this machine in locations accessible to children.

Precautions in use

⚠ CAUTION	
Be careful with the movable parts	Caution with cutters
* Do not touch a rolling grit roller, or may hurt fingertips or tear off finger nails * Keep head and hands away from any moving parts during plot operation, or may cause accidental injuries. * Wear proper clothes. (Do not wear such as loose-fit clothes and accessories). Bind a long hair.	* Do not touch the edged cutter blade. * Do not swing a cut holder to avoid danger. The blade may be lunged out.
Sheets	Other usage precautions
* If media that is likely to tightly curl, flatten first the paper before using it for printing. Heavilycurled sheet affect the Cut (plotted) result.	* Keep children away from this machine.

Warning Labels

The device is adhered with a warning label that informs the customer of possible risks associated with the device.
Be sure to understand the correct meaning of the warning label to avoid danger.
If the warning label is illegible due to stains or has come off, purchase a new one(same label on the machine) from our sales office.

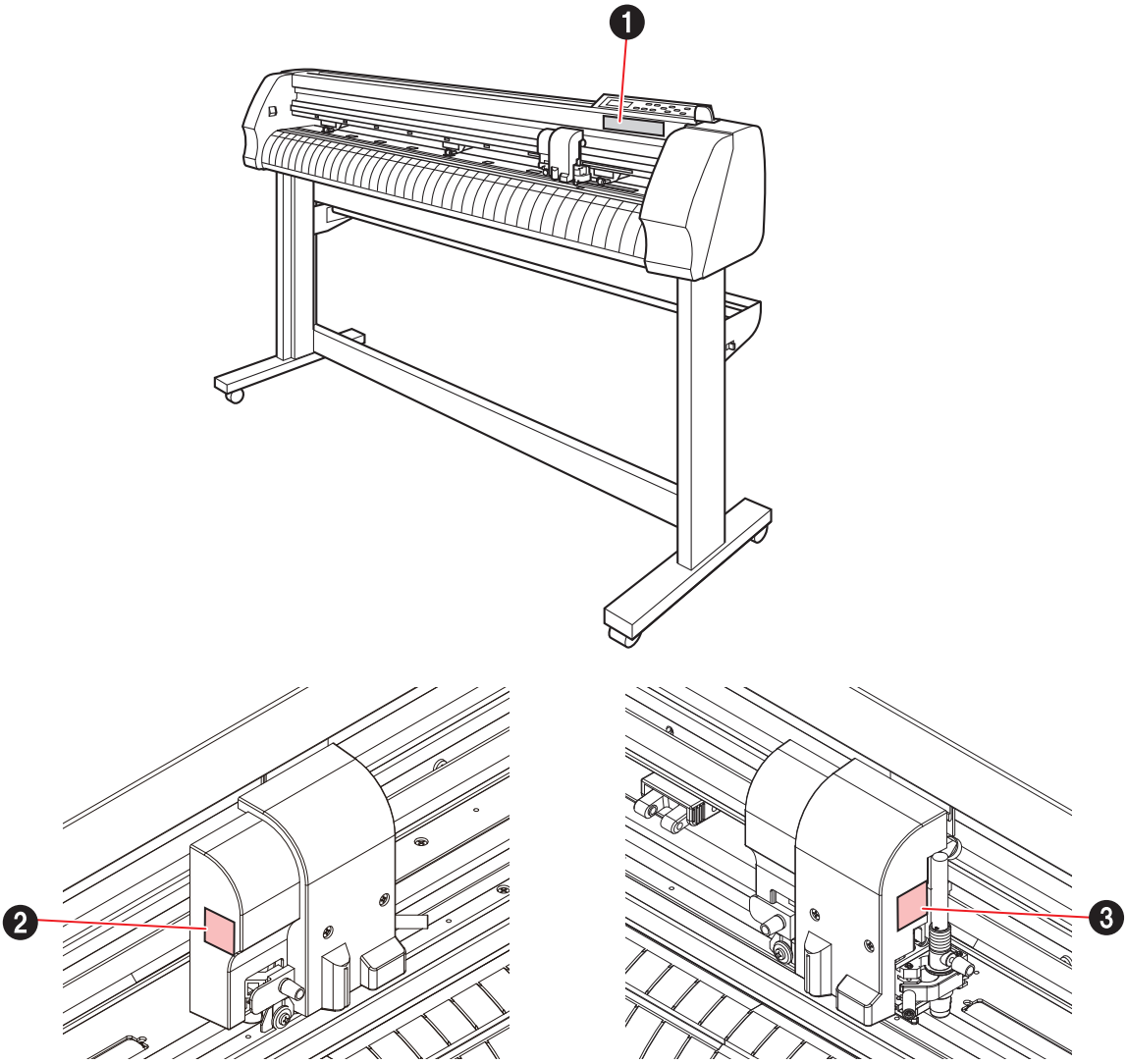

No.	Order code	Label	Details
1	M904451		Be careful not to touch the cutter or grit rollers while this machine is operating. Failure to do so may result in injury.
2	M903405		Beware of the cutter.
3	M906144		Indicates hot parts.

How to read this operation manual

Display panel and Indication of the Keys

In this Operation manual, the characters Display panel of the operation panel and the keys used to operate the device are explained, together with the operation procedure. ☞P. 1-8
Operate the device while confirming the Display panel.

Display panel

The content of display is shown in characters in a box as shown at right.

DATA CLEAR < ENT >

Operate the device according to the explanation of the operation procedure and the content of display on the LCD.
In this Operation manual, each setting and messages displayed on the LCD is enclosed in [ ], like [DATA CLEAR], [CT1], etc.

CT1 020 050 0.30

Operation keys

In the text of this Operation manual, the operation keys are shown enclosed in brackets.

[▲] and [▼] indicate JOG keys.
The other operation keys are enclosed in brackets, as [FUNCTION]. ☞P. 1-8

TABLE OF CONTENTS

Caution i
Interference to televisions and radios ii
Foreword iii
On This Operation manual iii
Features iv
For safe operation v
Pictorial signs v
Precautions in installation vii
Installation Precautions vii
Precautions in use viii
Warning Labels ix
How to read this operation manual x
Display panel and Indication of the Keys x
TABLE OF CONTENTS xi

Chapter 1
Before Use

Checking the accessories 1-2
..... 1-2
Main unit BOX 1-3
Configuration and function 1-5
The Front 1-5
The Rear 1-6
Operation Panel 1-7
Carriage 1-8
Pinch rollers and grit rollers 1-9
Control the clamp pressure 1-11
The sheet sensor 1-12
Pen line 1-12
Scale seal 1-13
Put a scale seal on a main unit 1-13
Measure a leaf sheet 1-13
Connecting the cables 1-14
Connecting USB Driver 1-14
Connecting the interface cables 1-14
Connecting the power cables 1-15
Menu mode 1-16
< NOT-READY > mode 1-16
< LOCAL > mode 1-16
< REMOTE > mode 1-16
< FUNCTION > mode 1-16

Chapter 2
Basic Operations

Operation 2-2

Attach a tool 2-3
How to attach a cutter blade 2-3
Adjusting the blade tip of the cutter 2-4
Attaching a tool 2-5
Attaching ball-point pen on the market 2-6
Turining the power on 2-7
Tool conditions setting 2-8
Cut conditions (CT1~CT5) settings 2-9
Plotting conditions (PEN) settings 2-11
Pouncing conditions (PIN) settings 2-11
Half cut conditions (HLF) settings 2-12
Loading a sheet of media 2-13
Maximum cutting area 2-13
Sheet detection 2-14
Loading a leaf sheet 2-16
Loading a roll sheet 2-17
Execute test cutting (plotting) 2-20
Starting cutting (plotting) 2-21
Setting an origin 2-21
Starting cutting (plotting) 2-22
Putting the cutting (plotting) on hold 2-22
Turning the power off 2-23

Chapter 3
Function

Functions invoked with the jog mode (jog keys) 3-2
Key operation 3-2
Setting an origin 3-3
Paper cut 3-3
Two-point axis alignment 3-4
Cutting area 3-4
Digitization operation 3-5
Functions invoked with the specific keys 3-6
Key operation 3-6
Switch between remote and the local mode [REMOTE] 3-6
Set the tool configurations [TOOL] 3-7
Set the distance compensation [TOOL] 3-7
Feed the paper [FEED] 3-10
Clear the data [DATA CLEAR] 3-10
Modify the sheet displacement [ENTER / HOLD] 3-11
Enter the registration mark detection mode [END] 3-11
Functions 3-12
Key operation 3-12
Test cutting [SQUARE CUT] 3-13
Cut (plot) the same data on multiple sheets [No. COPIES] 3-13

Check the sensor for the registration mark detection [MARK sensor].....3-14
Correct the light pointer position [MARK SENSOR] 3-16
Alignment of MARK SENSOR.....3-18
Examine the cut error [SAMPLE CUT] 3-19
Output the list of configurations [LIST] 3-20
Output the received data by the ASCII code [ASCII DUMP] 3-20
Cut a roll sheet at intervals automatically [SHEET CUT] 3-21
Switch the displayed language [DISPLAY].....3-22
Set each functions [SET UP].....3-22
Setting function 3-23
Key operation 3-23
Set the operation of the registration mark detection [MARK DETECT].....3-24
Warnings on inputting data with registration marks.....3-24
Method to detect registration marks 3-34
Detect procedure ([DIST.REVI.] Setting value is "BEFOR").....3-35
Detect procedure ([DIST.REVI.] Setting value is "AFTER") 3-36
Link cut and print (ID cut) (Applicable models: Plus series) 3-42
Expand the cut (plot) area [EXPANDS].....3-43
Switch the cutting mode [CUT MODE] 3-43
Set the function according to the blade tip direction [DUMMY CUT].....3-44
Specify the sheet type [SHEET SET] 3-44
Set the offset value of the automatic feeding function [FEED OFFSET].....3-44
Cut off the sheet automatically after completing cutting operation [AUTO. CUT] 3-45
Divide a large data before cutting [DIVISION CUT] 3-48
Perform cutting with a dotted line [HALF CUT] 3-51
Perform plotting with a perforated line [POUNCING] 3-52
Switch the origin point [ORGN SELECT] 3-52
RotationSwitch the cut (plot) moving direction [ROTATION].....3-54
Change the cutting (plotting) order [SORTING] 3-55
Switch the commands from a host computer [COMMAND] 3-57
Set the configurations with a computer [INTERFACE].....3-58
Set the each device number for a USB connection [DEVICE No.].....3-58
Command priority setting [PRIORITY] 3-59
The maximum size of the response [DISTANCE] 3-59
In use of the undetectable sheet [SHEET sensor] 3-60
Set the movement speed of carriage and sheet [UP SPEED] 3-60
Set the movement distance of carriage and sheet [JOG STEP] 3-61
Mute setting on the key noise and the error buzzer [BUZZER].....3-61
Switch the unit of length [MM/INCH] 3-61
Uncut parts on the corner [ADJ-PRS OFS] 3-61
Select the bumber of pinch roller to use [PINCH ROLL.] 3-62
Set Over-cut Function [OVER CUT].....3-62
Set Start Mode [START MODE].....3-63
Detect a registration mark automatically after the sheet is detected [SEARCH MARK] 3-63
Set the function of VIEW FEED [VIEW FEED].....3-66
Reset the setting values [SETUP RESET] 3-66

Chapter 4
In Case Of Trouble

Before taking a phenomenon as a trouble 4-2
Trouble for which error messages are given on the LCD 4-4
Error message 4-4
Warning message 4-8

Chapter 5
Appendix

Specifications of the main unit 5-2
Repeatability condition 5-3
Cutter blade 5-4
Replacing the cutter blade 5-4
Adjusting the cutting edge 5-5
How to replace the blade for sheet cutter 5-6
Sheet setting 5-7
Function Flowchart 5-8
Functions invoked with the specific keys 5-8
Functions invoked with the jog mode (jog keys) 5-10
Functions 5-12

Chapter 1
Before Use

This chapter describes on the parts name and setting procedures before use.

Table of contents

Checking the accessories 1-2
Configuration and function 1-4
Scale seal 1-12
Connecting the cables 1-13
Menu mode 1-15

Checking the accessories

The articles illustrated below are supplied with your device as accessories.
Check them up for correct quantities and appearance. If you should find any fault, please contact your distributor.

Leg BOX

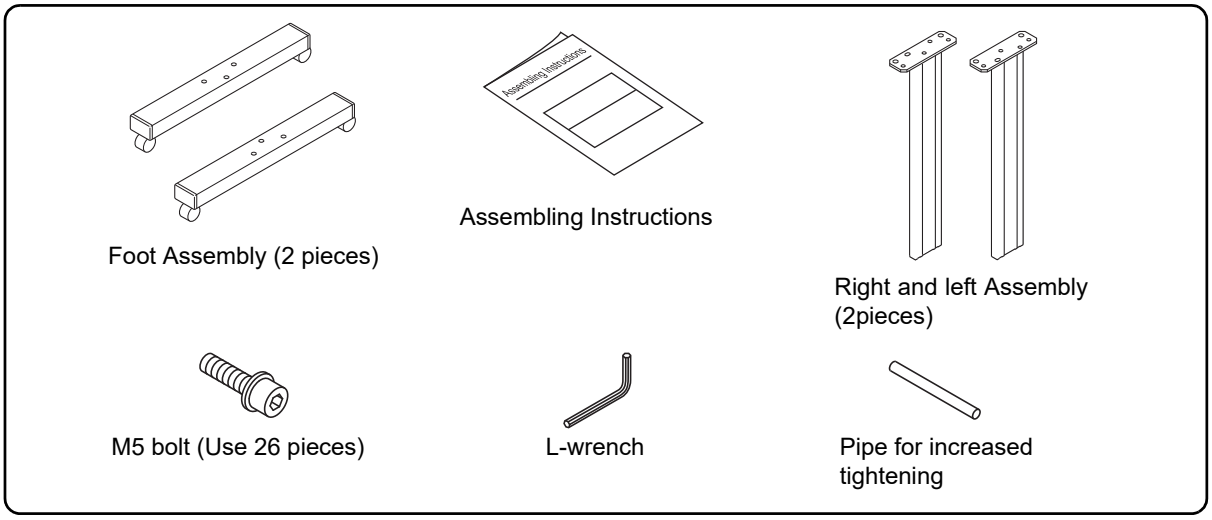

Product name	Q'ty	Remarks
Foot Assembly	2	
Right and left Assembly	2	
Assembling Instructions	1	
M5 bolt	26	
L-wrench	1	
Pipe for increased tightening	1	

Main unit BOX

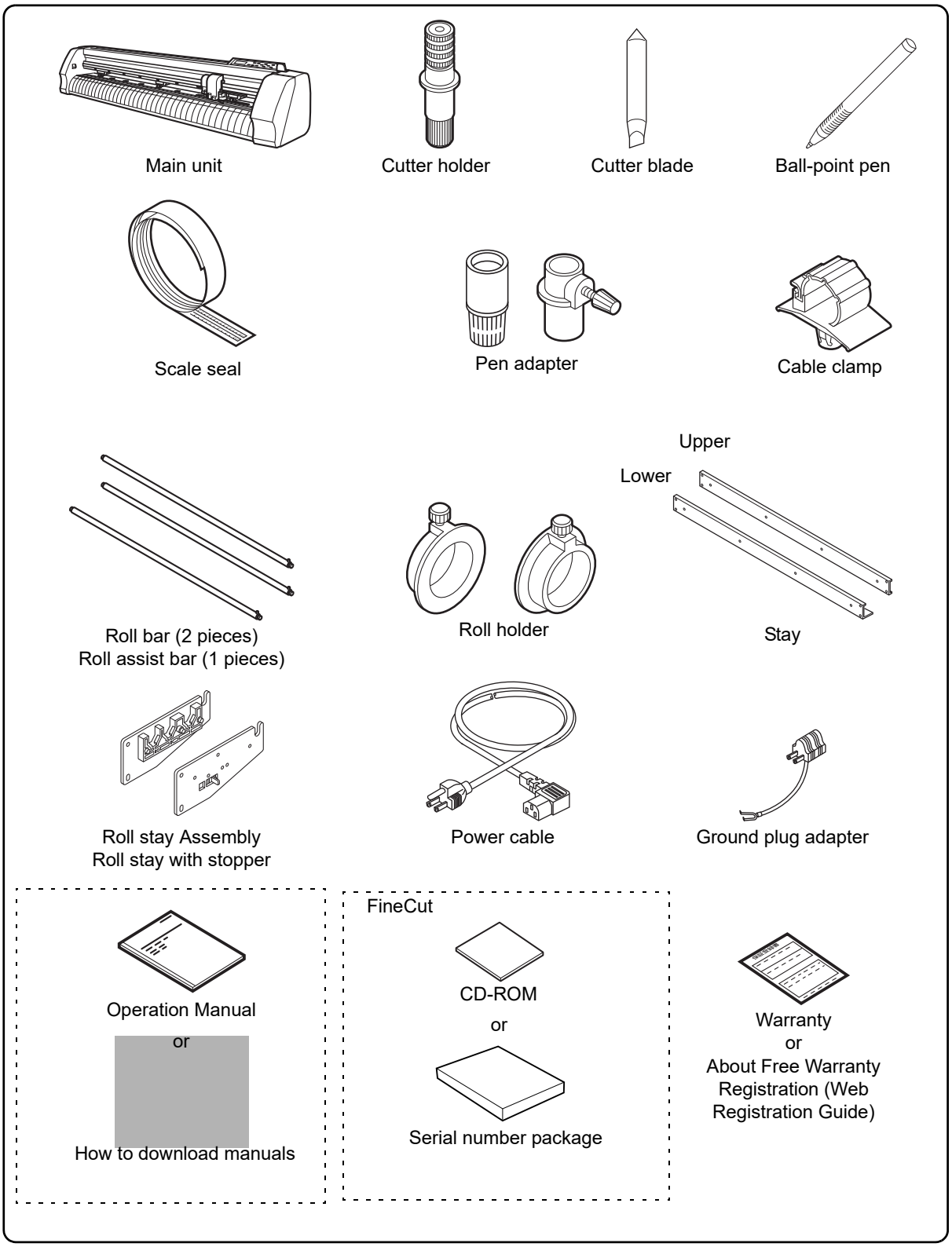

Product name	Parts No.	Q'ty	Remarks
Main unit	-	1	
Cutter holder	SPA-0090	1	
Cutter blade	SPB-0030	1	
Ball-point pen	-	1	Black, Marketed item
Pen adapter	SPA-0169	1	
Cable clamp	-	4	Use for fixing a power supply cable or a interface cable.
Scale seal (mm, inch)	-	each 1	Use for measuring a leaf sheet.
Roll bar	-	2	
Roll assist bar	-	1	
Roll holder	-	2	
Stay	-	each 1	
Roll stay Assembly	-	1	
Roll stay with stopper	-	1	
Power cable	-	1	
Ground adapter	-	1	
Operation Manual or How to download manuals	-	1	Operation Manual:This manual
FineCut (CD-ROM or Serial number package)	-	1	**CD-ROM:** FineCut, USB Driver. *USB driver in some cases may be downloaded from the website. **Serial number package:** The serial number sticker is enclosed. Download the software from our website.
Warranty or About Free Warranty Registration (Web Registration Guide)	-	1	

Configuration and function

The Front

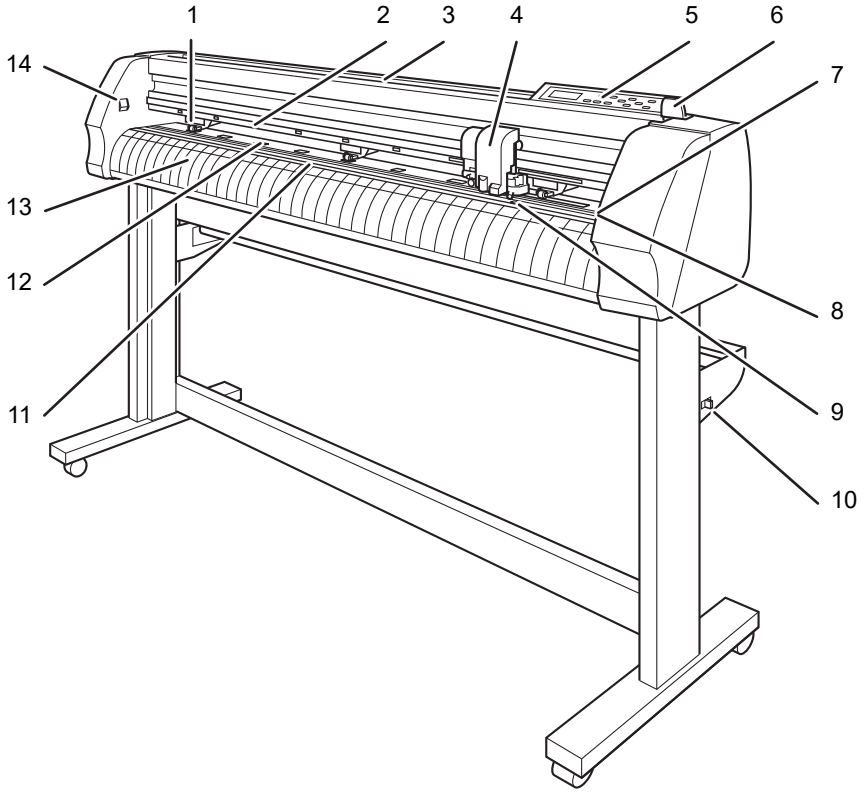

	Name	Function
1	Pinch roller	The pinch rollers can be moved to the right or left to adapt to the size of sheet to be used. The pinch rollers feed out the sheet while pressing it against the corresponding grit rollers. (☞P. 1-9)
2	“PINCH ROLLER SETTINGS” Mark	The marks indicate the locations at which the pinch rollers are set.☞P. 1-9 Note that the cutter has to be kept out of reach of children since it can be dangerous.
3	Tray	Small articles can be placed on it.
4	Carriage	The carriage travels from side to side while holding a tool. It is also used to raise/lower the tool. ☞P. 1-8
5	Operation panel	The device is operated and functions are set on the operation panel. ☞P. 1-7
6	Clamp lever	Tilting the lever away from you lowers the pinch rollers to retain the sheet of medium.
7	Pen line rubber	The device performs cutting or plotting on the pen line rubber. ☞P. 1-12
8	Pen line sponge	The device performs pouncing on the pen line sponge. ☞P. 1-12
9	Sheet sensor	It detects the presence of the sheet and sheet length. ☞P. 1-12
10	Roll stopper	When setting a sheet, prevents from the roll sheet rotating. ☞P. 2-17
11	Gage seal	Use as the indication of setting a leaf sheet. ☞P. 1-13
12	Grit roller	The grit rollers operate in combination with the pinch rollers to feed out the sheet. ☞P. 1-9
13	Platen	The sheet of medium moves along the platen.
14	Power switch	It turn on/off the power.☞P. 2-7

The Rear

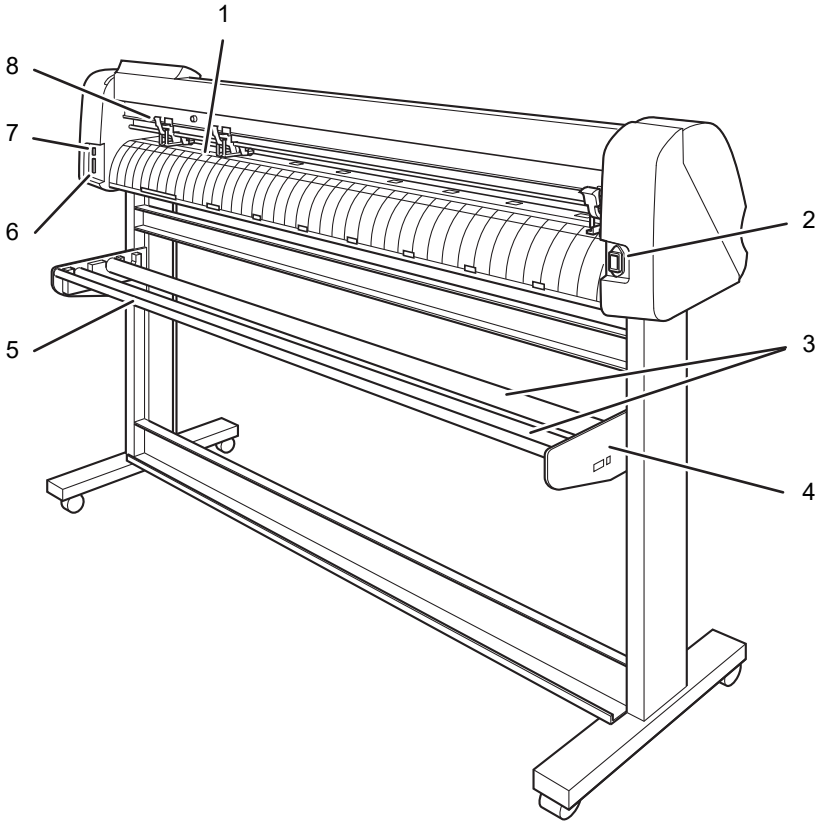

	Name	Function
1	Sheet sensor	It detects the presence of the sheet and sheet length. P. 1-12
2	AC inlet	The power cable is connected to the AC inlet. P. 1-15
3	Roll bar	A roll sheet is placed on the two roll bars.
4	Roll stay	Roll stays support the roll bars.
5	Roll assist bar	In the case where two rolls of sheet are loaded on the device, the turn-back lever works to prevent the lower roll sheet from coming in contact with the upper roll sheet.
6	RS-232C interface connector	The RS-232C compatible interface connector. It is connected to the RS-232C connector of the host computer via an interface cable. P. 1-14
7	USB interface connector	The USB interface connector. Connects with the USB connector of the host computer through a USB interface cable. P. 1-14
8	Clamp pressure lever	This lever is used to adjust the force by which the clamp is held. P. 1-11

Operation Panel

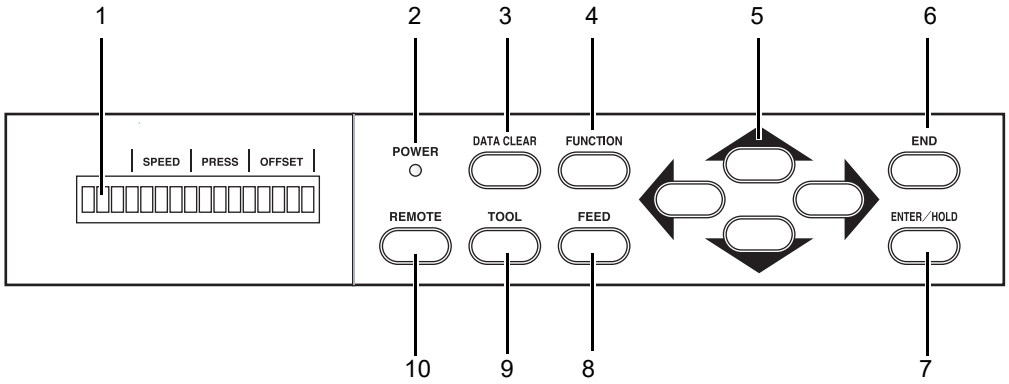

1	Display panel	The display panel indicates tool conditions such as speed, pressure and offset, tool coordinates, functions and error messages.
2	POWER lamp	It lights up when the power to the device is turned on.
3	[DATA CLEAR] key	This key is used to clear the data received. ☞P. 3-10
4	[FUNCTION] key	Function setting mode
5	[JOG] key [◀] [▶] [▲] [▼]	These arrow keys are used to shift the carriage or sheet in the corresponding direction or change settings. ☞P. 1-8
6	[END] key	It is used to cancel the value is last previously input. Use the key to detect only the sheet width.
7	[ENTER/HOLD] key	This key is used to enter the last previous input value for a setup item. Use the key to replace the slipped sheet during plot operation.
8	[FEED] key	This key is used to execute the sheet feeding. ☞P. 3-10
9	[TOOL] key	This key is used to select a tool and establish tool conditions.
10	[REMOTE] key	It is used to change over the operation mode between the REMOTE mode and LOCAL mode. If this key is pressed while the device is in operation, the device will be brought to a halt. To restart the device, repress the key. ☞P. 3-6

Jog keys

The arrow keys are used as described in the table below.

	Before the detection of a sheet	After the detection of a sheet	When selecting a function	When inputting a choice selected among several alternatives
◀	Detects the sheet width and the top end of the sheet. (In the case where a roll sheet is loaded onto the rear of the device)	Shifts and carriage to the left.	—	—
▶	Detects the width and length of the sheet. (In the case where a cut sheet is loaded onto the rear of the device)	Shifts the carriage to the right.	—	—
▲	Detects the sheet width and the top end of the sheet. (In the case where a roll sheet is loaded onto the front of the device)	Shifts the sheet away from you.	Restores the last previous function.	Selects the last previous value.
▼	Detects the width and length of the sheet. (In the case where a cut sheet is loaded onto the front of the device)	Moves the sheet toward you.	Moves to the next function.	Select the next function.

Carriage

Pen-shaped cutter and tool holder are attached to the carriage. Sensor for detecting a sheet / registration mark, and sheet cutter are also attached.
Light pointer lights up in red during positioning for the registration mark detection.
When the registration mark detection is set to non-OFF, the light pointer goes out by pushing over the clamp lever. Pull the lever forward to light up the light pointer.
Make sure if no action performed for five minutes after pulling clamp lever down, the light pointer will automatically go out.

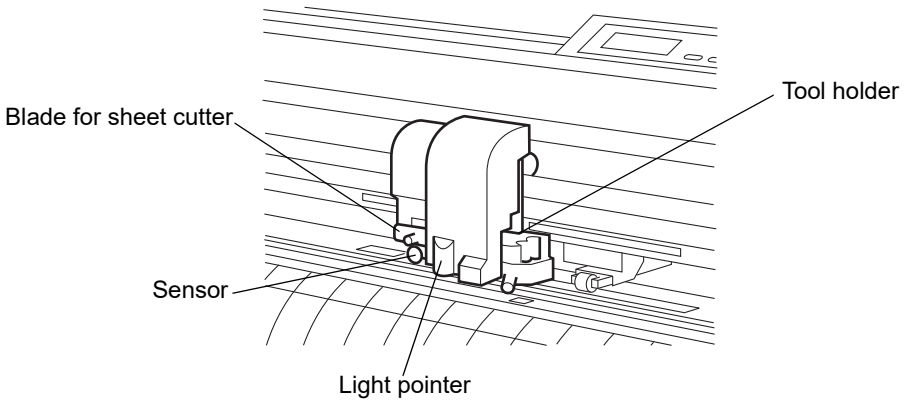

Pinch rollers and grit rollers

The portion located between the pinch rollers 1 and 2 is the travel range of the carriage. Move the pinch rollers to appropriate grit rollers in accordance with the width of sheet to be loaded on the device. The areas within which the pinch rollers may be shifted are described below. Change the location of the pinch rollers using the “PINCH ROLLERS SETTINGS” marks as a guide.

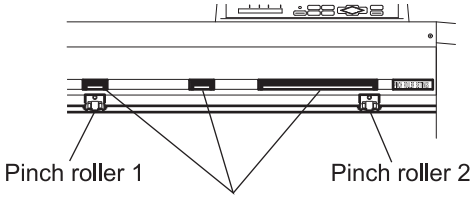

Important!

* Be sure to raise the pinch rollers whenever the machine is not in operation.
* Keep away from the rotating grit rollers. Injury could result if the rotating grit rollers are contacted since the rotating grit rollers can shave the skin or the rotating grit rollers and platen can catch fingers between them.
* Never set the pinch rollers with deviated or separated from the grit rollers. In case the pinch rollers not set properly, it may cause an error and the sheet detect cannot be performed correctly.

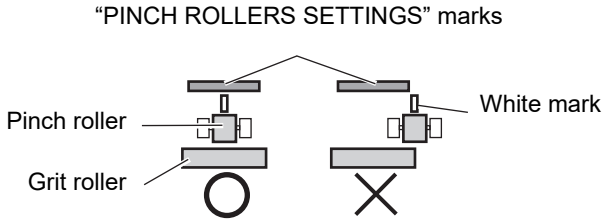

Movement range of pinch rollers 1 and 2

Important!

* When using three pinch rollers, arrange the middle pinch roller in the center of the sheet. In case positioning to one-side, it may cause sheet slippage.
  Or when using four pinch rollers (CG-160FXII (Plus)), positioning to equally.
* Move the pinch roller 3 to the retracted point located at the leftmost end of its travel range in the case where the pinch roller 3 is not used for operation.
  Or set to the number of pinch roller its using. (☞P. 3-62)
  If the pinch roller 3 is located at any position other the retracted point, the device will not be able to perform the sheet detection.

CG-75FXII (Plus)

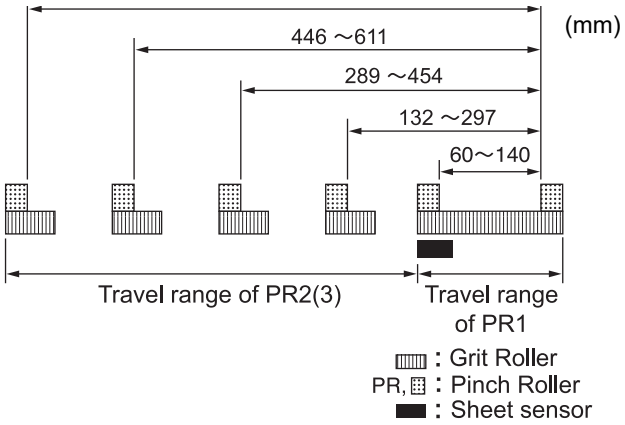

CG-130FXII (Plus)

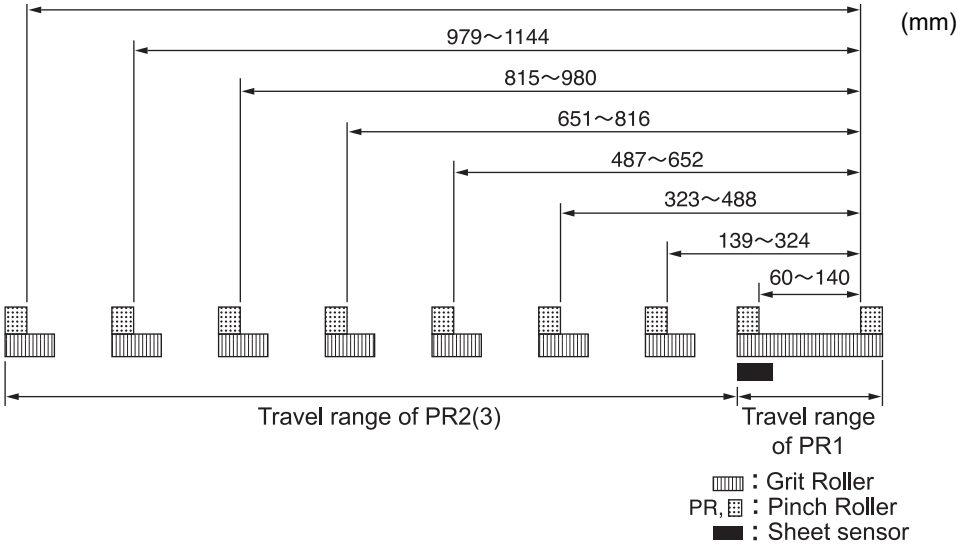

CG-160FXII (Plus)

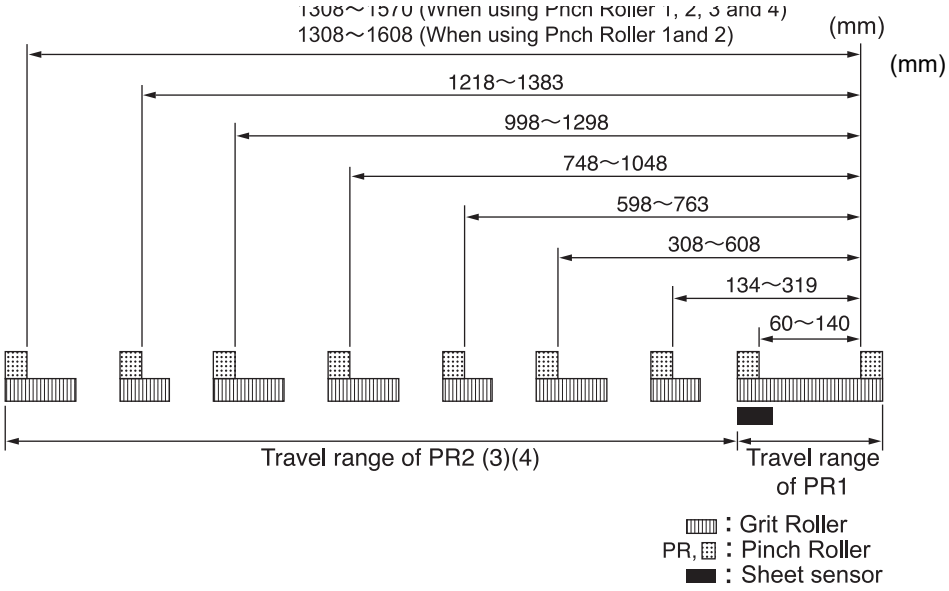

Control the clamp pressure

The clamp pressure can be changed in two levels using the clamp pressure lever. Select higher or lower level of the clamp pressure that matches the sheet to be used.

Important! * Set the both clamp pressure is high mode when in using. If using the clamp in a low mode, it may cause the misaligned sheet. Use the middle clamp in need. (See below)

CG-75FXII (Plus), CG-130FXII (Plus)

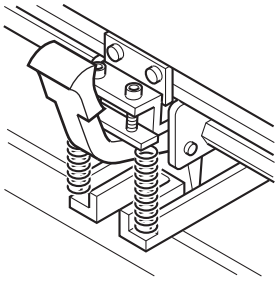

High mode : Raise the clamp pressure lever.

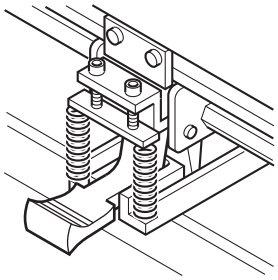

Low mode : Lower the clamp pressure lever.

CG-160FXII (Plus)

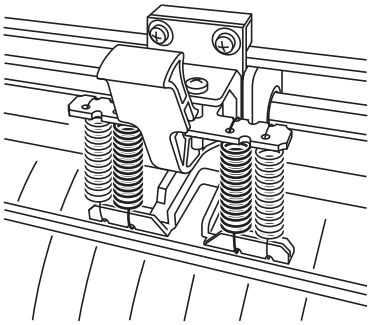

High mode : Raise the clamp pressure lever.

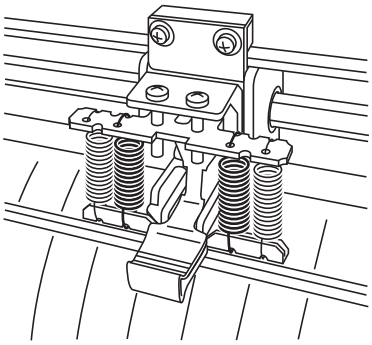

Low mode : Lower the clamp pressure lever.

Clamp pressure	Application
High mode	• High modeFor cutting the sheet. • In the case where heavy-weight paper (70 kg or more) is used.
Low mode	• In the case where impressions of the pinch rollers should not be left on the sheet of media. Important! * Depends on the sheet type, feed length, or the sheet width, the sheet may be misaligned.

The sheet sensor

The sheet sensors detects the presence of the sheet and the sheet length.
There are 2 media sensors on the platen.

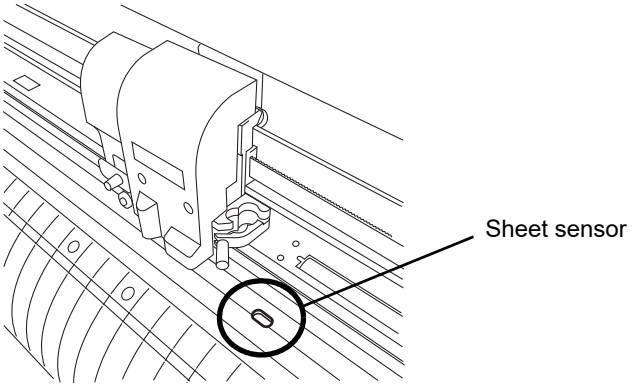

Pen line

Two types of the pen line, rubber pen line and sponge pen line provided.
Use the rubber pen line for cutting and plotting. The sponge pen line is used for pouncing and cutting on dotted line.
Use the appropriate pen line depends on the tool attached position.

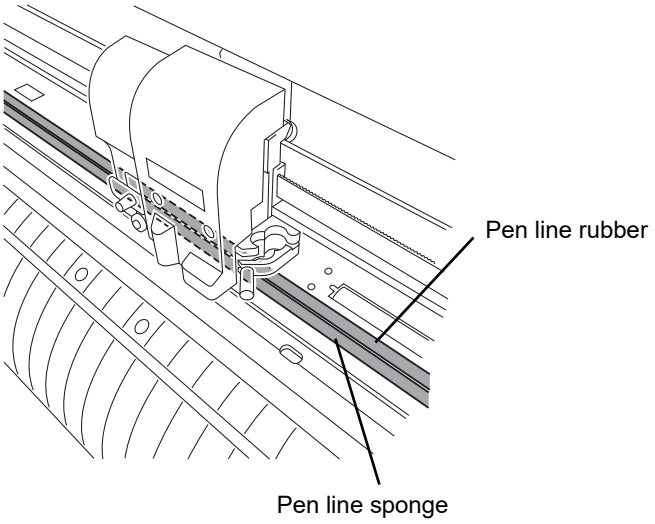

Scale seal

Scale seal is the seal with a scale to measure a leaf sheet.
We provide the two types of the scale seals, mm unit scale seal and the inch unit scale seal.

Put a scale seal on a main unit

1. Remove the seal little by little from the end to put on the main unit.

   Put the seal on the platen as shown on the picture right.

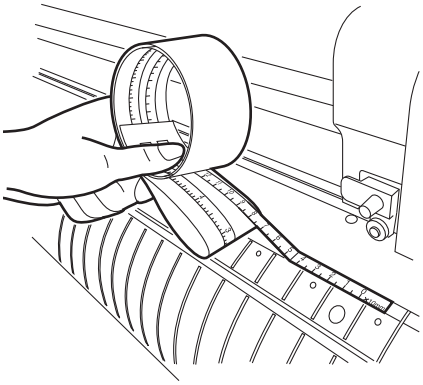

Measure a leaf sheet

Measure a leaf sheet as shown on the picture right.

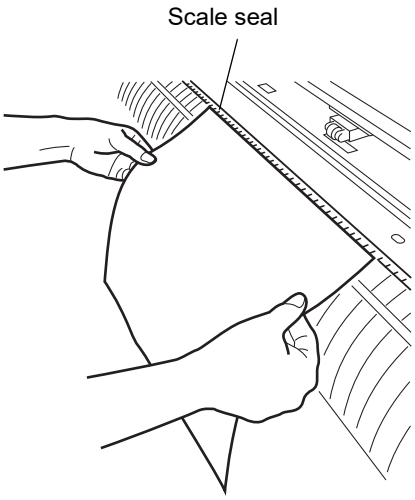

Connecting the cables

Important!

* When connecting the cables, turn off first the power to the device and that to the host computer which the power cable is to be connected.
* Do not insert/remove the cable during data transferring.
* Follow the instructions in case the wizard displayed when connected a USB cable.

Connecting USB Driver

As for USB driver connection, refer to "USB Driver Installation Guide" in the supplied FineCut.

1. Set the CD supplied with FineCut into the disk drive.
2. Click [CD-ROM Contents] on the menu.
3. Open [usb11_installguid(en).pdf] for the plotter used in [Mimki USB1.1 Driver] folder.

Connecting the interface cables

The device comes with two different kinds of interfaces.
Select either one that matches the host computer.

- RS-232C compatible interface
- USB interface

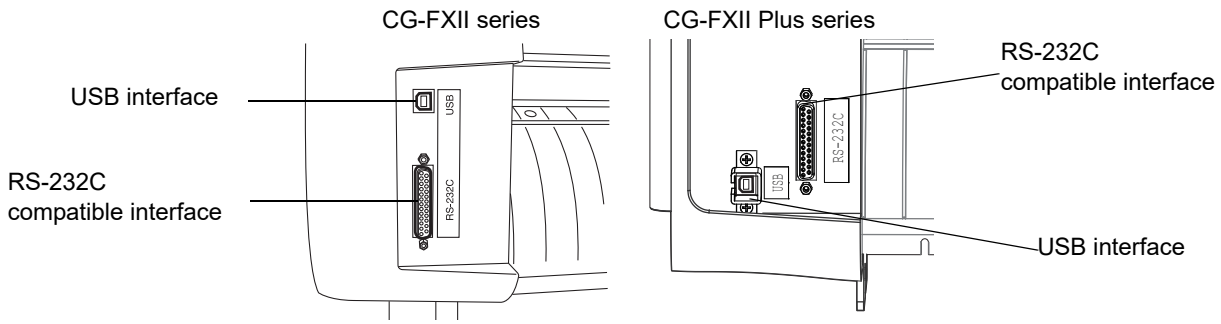

Important!

* It is necessary the settings of interface which to use.
* Plug in/out the connecter carefully. Too much pressure may damage the connecter.

Connecting the power cables

Connecting the power cablesAfter the completion of interface cable connection, connect the power cable.
Connect the power cable to the receptacle of the following power specification.

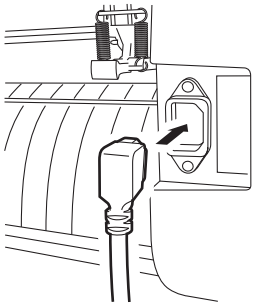

- Voltage AC100V to 240V ±10%
- Frequency 50/60Hz ±1%
- Capacity 100W or more (equivalent to 2 A)

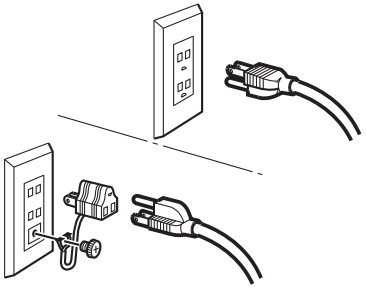

Hint!

- When using a 2-pole electrical outlet, connect the grounding adapter supplied with the power cable plug to the grounding adapter's green wire (earth wire).
  If the grounding can not be processed, please consult with the electrician.

Important!

* Be sure to ground.
If connect the machine without grounding, it may break the machine or cause electric shock.

Menu mode

There are the following four mode in this device.
Each of the four modes is explained below.

< NOT-READY > mode

This is the mode before the medium detector.
The keys other than the [REMOTE] key are effective.

< LOCAL > mode

This is the mode after the sheet detection.
All keys are effective to enable setups.
The device is able to receive data from computer, however, it will not perform cutting (plotting).
In this mode, it is possible to perform the following operations.

1. Pushing the appropriate [JOG] keys to detect a sheet and set up an origin.
2. Pushing the [TOOL] key to select a tool and set the configurations.
3. Pushing the [DATA CLEAR] key to erase the cutting (plotting) data the device has received.
4. Pushing the [FUNCTION] key to set cutting (plotting) conditions.
5. Pushing the [FEED] key to feed the sheet to be used.

< REMOTE > mode

The device cut(plots) an image from data it receives.
During the cutting (plotting) operation, push the [REMOTE] key to interrupt the cutting (plotting) operation.

< FUNCTION > mode

This is the mode in which cutting (plotting) conditions can be set.
While the device is in the LOCAL mode, push the [FUNCTION] key to put the device into the FUNCTION mode.

Chapter 2
Basic Operations

This chapter describes on the setting procedures from tool attaching to cut(plot) operation.

Important!

* Display panel shows the following message during saving the setting values such as tool setting value. Make sure not to turn off power during displaying the following message.

F-ROM WRINTING

* In the case setting values cannot be saved normally, all the values return to default values at the factory.

Table of contents

Operation 2-2
Attach a tool 2-3
Turining the power on 2-7
Tool conditions setting 2-8
Loading a sheet of media 2-13
Execute test cutting (plotting) 2-20
Starting cutting (plotting) 2-21
Turning the power off 2-23

Operation

The following shows a series of operations and settings, ranging from power-on to end of cutting (plotting).
For details on each item, refer to the reference page.

Tool ☞ P. 2-5

↓

Turn on the power on ☞ P. 2-7

↓

Set the tool conditions ☞ P. 2-8

↓

Set the sheet ☞ P. 2-13

↓

Execute test cutting (plotting) ☞ P. 2-20

↓

Start the cutting (plotting) ☞ P. 2-21

↓

Turn off the power ☞ P. 2-23

Attach a tool

The following tools are available on this plotter.
Cutter/Pen(Rollerball)/Poncing Pin(option)
When in use of a cutter, adjust the cutter blade before attaching.

Hint!

- Refer to the appendix for exchanging the cutter blade or procedure of adjusting the other cutter blade. (☞ P. 5-4)

How to attach a cutter blade

1. Loosen the cutter holder cap.
2. Loosen the cutter holder cap.Insert the cutter blade into the cutter holder using the tweezers.

   Important!

   * The cutter blade is sharp. Keep your fingers away from the cutter blade.

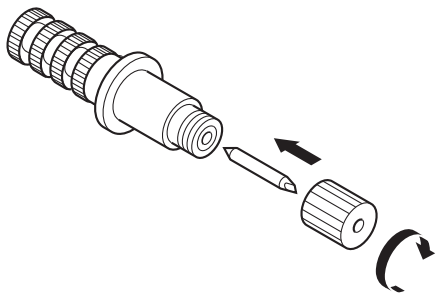

3. Tighten the cutter holder cap.

   Important!

   * Do not swing the cutter holder, or the blade may jut out from the cutter holder.

Adjusting the blade tip of the cutter

Adjust the protruding amount of the cutter blade to the type of cutter and sheet of media to be used.
When you have adjusted the cutter blade, conduct test cutting to check the cutter for sharpness.
For the cutter supplied with unit, the protruding amount of the blade can be adjusted with the cutter mounted in the pen carriage.

Hint!

- Turn the adjusting knob to the right. The blade tip comes out. (0.5mm for a circle)

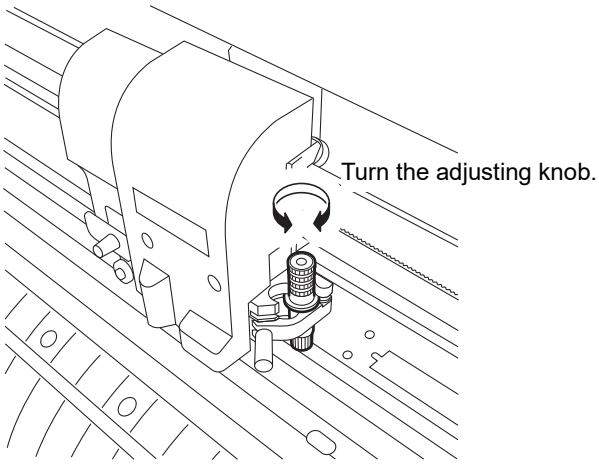

Protruding amount of the cutter blade

$$\text{Cut in amount} = \frac{(\text{Film thickness} + \text{Base paper thickness})^{*1}}{2}$$

*1：Film thickness < Base paper thickness

Protruding amount of the cutter blade = 0.3 to 0.5mm (If the cutter blade is dull, replace to a new one.)

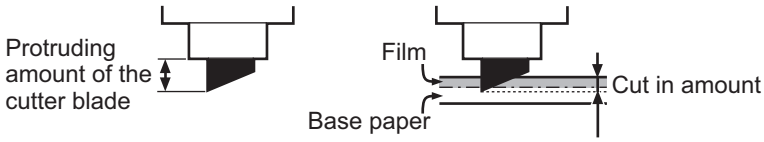

Important!

* Adjust the pressure slightly patterns remain on the base sheet.
* If cut quality is not accurate in order that base sheet thickness is thinner than film, changing the cut in amount may obtain the better cut quality.

Attaching a tool

Attach a tool to the tool holder of the carriage.
The tool can be loaded this side or far side of the tool holder. The attached position differs according to the selected tool.

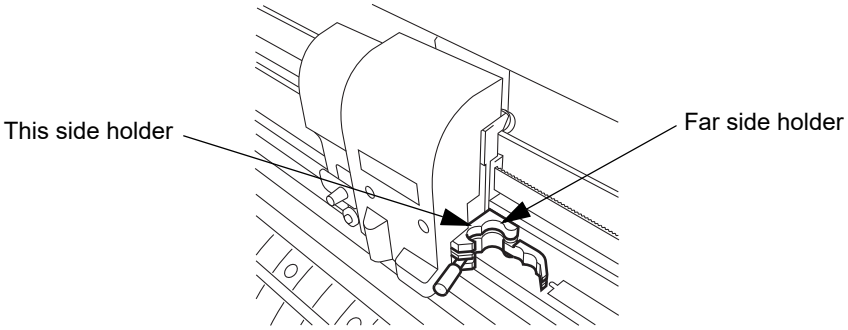

Far side holder	Far side holderPen-plotting or cutting of PVC sheet on the pen line rubber is enabled.
This side holder	Pouncing or half-cut cutting on the pen line sponge is enabled.

Important!

* Two tools cannot be loaded in the tool holder at a time.
* If the device performs cutting on this side sponge, an adequate pressure will not be applied to the sheet of media, adversely affecting the cutting result.
* The device is not able to perform pouncing on the far side rubber.

Installation procedure

1. Put a tool in the tool holder.

   Fitting the collar of the tool in the slit on the tool holder, put the tool in the holder.

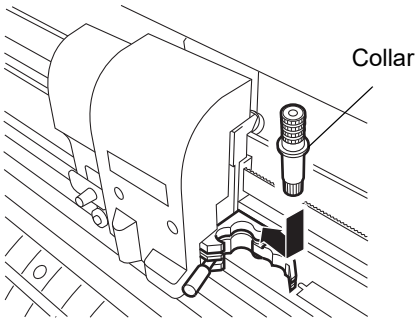

2. Turn the knob of the tool holder clockwise until the tool is secured.

Important!

* Be sure to securely fix the tool.
  If not, accurate and high-quality cutting (plotting) results will not be obtained.

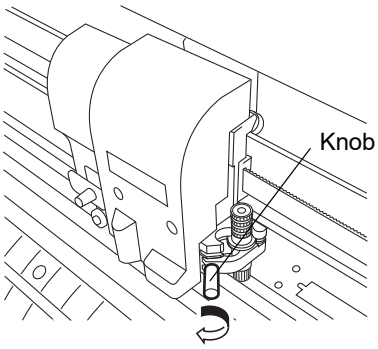

Attaching ball-point pen on the market

Important!

* As for the ball-point pen on the market, use the ones with 8 to 9 mm diameter.
  Picture quality may vary depending on the pen used.
  The recommended boll point pen is as follows, PENTEL CO., LTD. Products No. : K105-A, K105-GA
* In case holding the boll point pen of the following figures by pen adapter, it may cause slant or hit covers.
  Uneven gauge
  With level or bumps

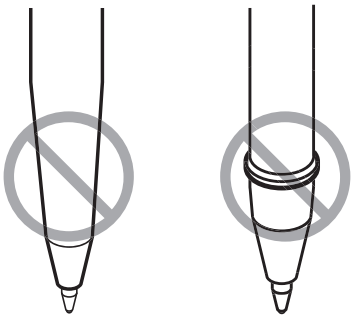

Installation procedure

1. Put the cap on the pen adapter.
   Use the cap to adjust a pen height.
2. Insert the pen into the pen adapter.
   Insert the pen all the way until the pen tip hits the cap.
3. Fix the pen tip.
   Now, tighten the fixing screw clock-wise.

   Important!

   * Be careful not to over tighten the fixing screw of the pen adapter. If tightened too much, ballpoint pen may crack.

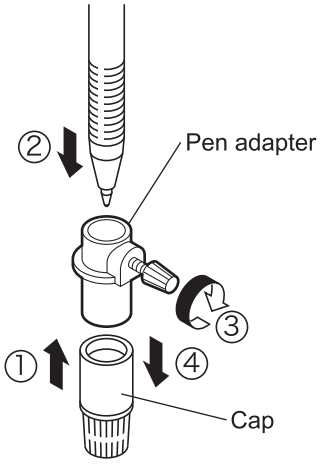

4. Remove the cap.
5. Insert the pen adapter with the pen into the tool.

   Important!

   * Set the adapter in a way that the fixing screw will not hinder operation.
6. Turn the knob of the tool holder clock-wise to fix the tool.

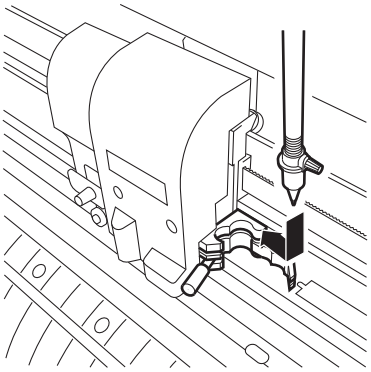

Turining the power on

Important!

* Be sure to check to ascertain that the pinch rollers have been raised before turning the power on.
* Turn on the power switch of the device after turning on the power to the host computer. If the aforementioned order is not correctly followed, the device can malfunction.

1. Press the " | " side of the power switch.

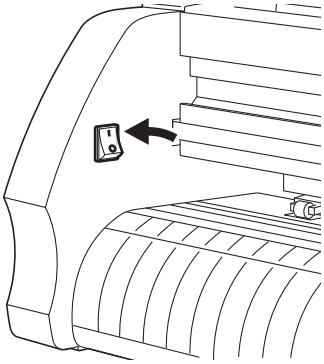

Hint!

- When the device is turned on, the device will enter operation modes in the predetermined order. ☞P. 1-16 for the operation modes.

Important!

* When turning on the power again after turning off the power, allow about 5 seconds or more.

2. The POWER indicator lamp lights up in green.

   The sheet suction fan rotates.

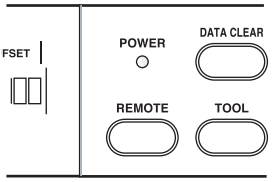

3. Check the receiving buffer.

   Then, the tool conditions for the currently selected tool appears on the LCD.

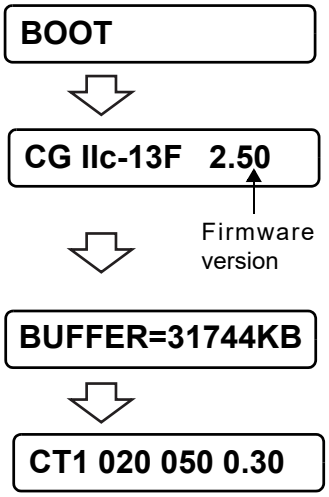

Tool conditions setting

Three different tool conditions are to be set such as cutting conditions, plotting conditions and pouncing conditions.
Specify “SPEED”, “PRESSURE” and “OFFSET” settings that suit the tool to be used.
To set tool conditions, press the [TOOL] key under the local mode, select tool condition and input settings.

Important!

* Three different tool conditions are to be set such as cutting conditions, plotting conditions and pouncing conditions.
  Specify “SPEED”, “PRESSURE” and “OFFSET” settings that suit the tool to be used.
  To set tool conditions, press the [TOOL] key under the local mode, select tool condition and input settings.

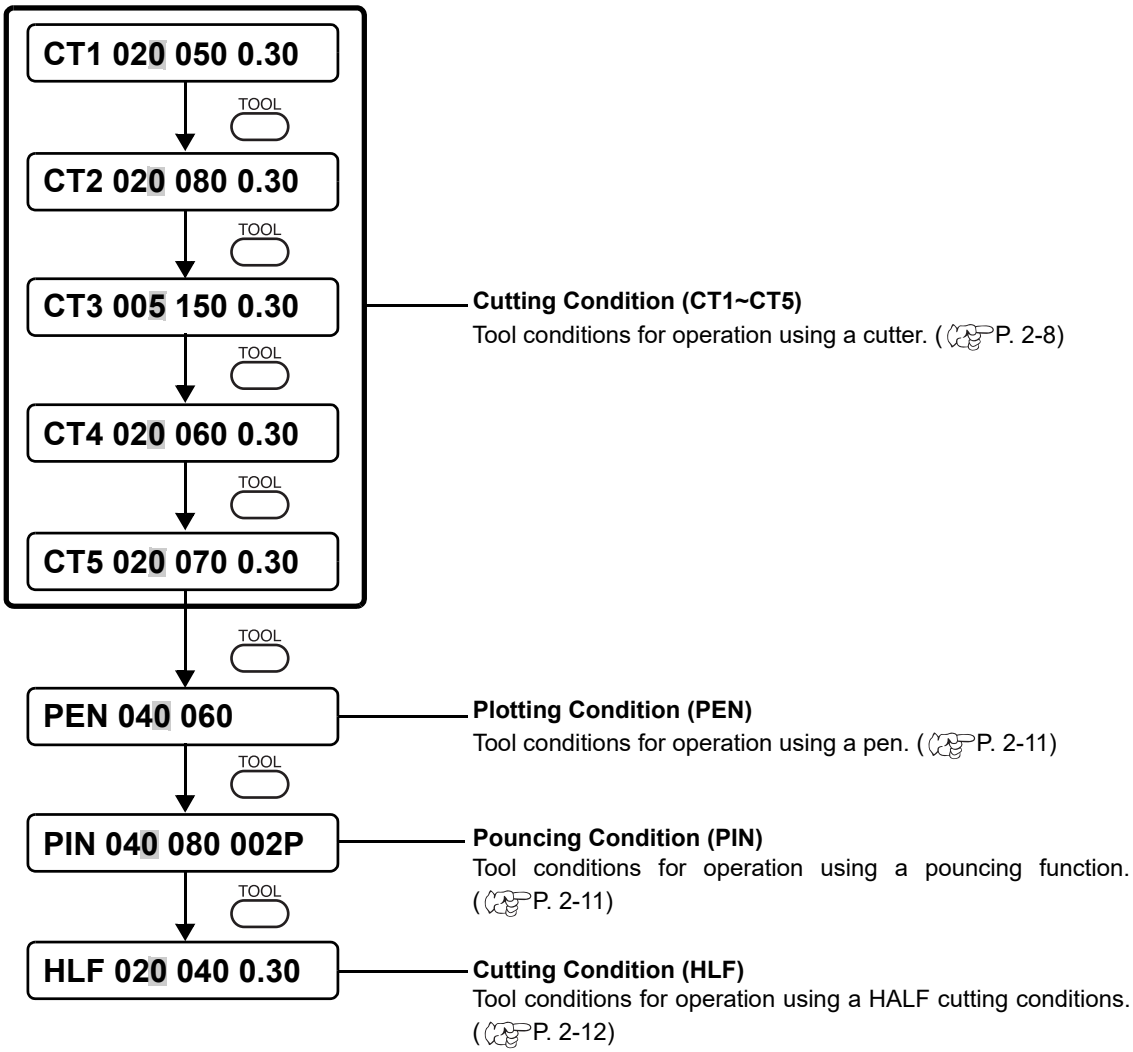

Hint!

- PIN and the HLF are not displayed unless setting the [POUNCING] and [HALF CUT] functions.

Cut conditions (CT1~CT5) settings

Enter tool conditions for the operation using a cutter. Three kinds of cutting conditions (CT1, CT2, CT3, CT4 and CT5) can be entered at a time. This means these conditions can be entered separately according to the cutter to be used. Once cutting conditions are specified, the cutter will perform a dummy cutting (to adjust the blade direction) (☞P. 3-44)

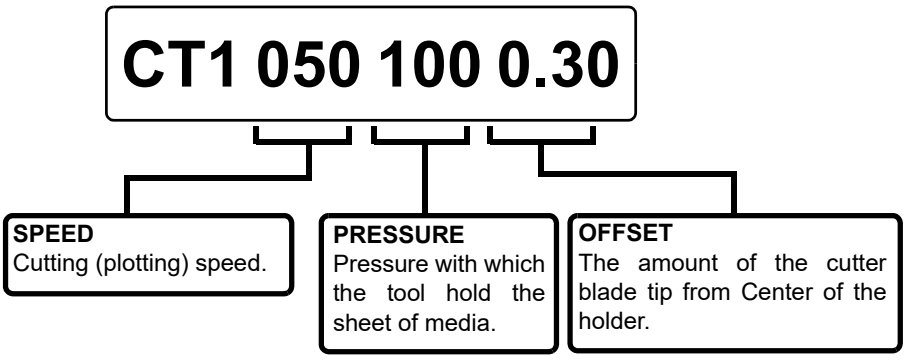

Hint!

- About OFFSET
  If the offset amount is increased, square-shaped characters will be cut/ plotted. If it is decreased, round-edged characters will be finished.
  Change the offset value depending of the sheet thickness or the type of blade. For the cutter supplied with the unit, set the offset to 0.30 mm.

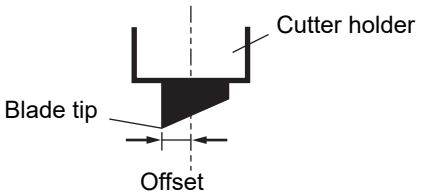

Setting value:

CG-FXII Series

SPEED	1 to 10 cm/s (1 cm/s step) 15, 20, 25, 30, 35, 40, 50, 60, 70, 80, 90, 100cm/s
PRESSURE	10 to 20 g (2 g step) 20 to 100 g (5 g step) 100 to 400 g (10 g step)
OFFSET	0.00 to 2.50 mm (0.05 mm step)

CG-FXII Plus Series

SPEED	1 to 10 cm/s (1 cm/s step) 15, 20, 25, 30, 35, 40, 50, 60, 70, 80, 90, 100cm/s
PRESSURE	10 to 20 g (2 g step) 20 to 100 g (5 g step) 100 to 500 g (10 g step)
OFFSET	0.00 to 2.50 mm (0.05 mm step)

Important!

* If a sheet width is 800mm or more, the cut speed is automatically slower than the preset speed. (Exc.CG-75FXII (Plus))

Procedure

1. Press [TOOL] key to select the cut number.
   Select [CT2].

   TOOL — CT2 020 080 0.30

2. Change the speed value with the jog keys [▲] and [▼].
   Increase the speed value to fast the speed. Decrease the value to slow the speed.

   CT2 050 080 0.30

3. Press [ENTER/HOLD] key or the jog key [▶] to move the cursor to PRESSURE.
   Press the jog key [◀] to return to the previous setting.

   ENTER/HOLD — CT2 050 080 0.30

4. Change the PRESSURE value by pressing the jog keys [▲] and [▼].

   CT2 050 100 0.30

5. Move the cursor to the OFFSET by pressing the [ENTER/HOLD] key or the jog key [▶].
   Press the jog key [◀] to return to the previous setting.

   ENTER/HOLD — CT2 050 100 0.30

6. Change the OFFSET value by pressing the jog keys [▲] and [▼].

   CT2 050 100 0.35

7. Determine the setting values by pressing [ENTER/HOLD] key or the jog key [▶].

   ENTER/HOLD — CT2 050 100 0.35

Hint!

- In the case where the pressure is smaller than 20 g, set the speed using a 10 cm/sec as a guide. If the speed is higher than the appropriate value, the tool can rise to produce blurred characters or a portion that remains uncut.
- In case setting an over 1200mm width sheet, the maximum cutting speed is limited up to 60cm/s to protect the sheet.(Even if the cutting speed is set to 60cm/s and above, the cutting speed is limited maximum at 60cm/s.)
- When setting a cut line segment to over 1000 mm, the maximum cutting speed is limited to 60cm/s.
- In the CG-160FXII (Plus), since the distance from the drive motor on the left of the device is wide creating a wide cut, and the quality of the cut declines as the cutting position reaches the left edge, make sure you reduce the speed to unify the quality of all cut segments. Therefore, the cutting speed appears to be slower when the cut line segment is short.
- When speed limiting has been performed, the display indication speed is not restricted.

Plotting conditions (PEN) settings

Enter conditions for the operation using a pen.
Set the SPEED and PRESSURE values. No setting for the OFFSET value.

Setting value:

SPEED	1 to 10 cm/s (1 cm/s step) 15, 20, 25, 30, 35, 40, 50, 60, 70, 80, 90, 100cm/s
PRESSURE	10 to 20 g (2 g step) 20 to 100 g (5 g step) 100 to 150 g (10 g step)

Operation Procedure

Refer to the Cut condition settings. (☞P. 2-9)
Select [PEN] in the step 1.

Hint!

- Reference values of conditions for plotting
  Before actually cutting a sheet of media, conduct test plotting to check the quality of finished characters and marks.

Reference value of plotting condition:

Type of pen	SPEED	PRESSURE
Water-ink ball-point pen (0.3 mm)	40cm/s	60g
Oil-based ink ball-point pen	40cm/s	150g
Commercial ballpoint pen	40cm/s	70 ～ 110g

Pouncing conditions (PIN) settings

When the POUNCING settings is set to ON, the PINis available to register the setting.
OFFSET condition indicates the interval between pins (P). (☞P. 3-35)

Setting value:

CG-FXII Series

SPEED	1 to 10 cm/s (1 cm/s step) 15, 20, 25, 30, 35, 40, 50, 60, 70, 80, 90, 100cm/s
PRESSURE	10 to 20 g (2 g step), 20 to 100 g (5 g step) 100 to 400 g (10 g step)
DOT INTERVAL	1 to 100 mm (1 mm step)

CG-FXII Plus Series

SPEED	1 to 10 cm/s (1 cm/s step) 15, 20, 25, 30, 35, 40, 50, 60, 70, 80, 90, 100cm/s
PRESSURE	10 to 20 g (2 g step), 20 to 100 g (5 g step) 100 to 500 g (10 g step)
DOT INTERVAL	1 to 100 mm (1 mm step)

Operation Procedure

Refer to the Cut condition settings (☞P. 2-11).
Select [PIN] in the step 1.

Half cut conditions (HLF) settings

When the HARF settings is set to ON, the HLF is available to register the setting.
The following items are settable in the HARF settings. (☞P. 3-35)
The following setting items are available for the half cut setting (☞P. 3-51).

- Half cut : Setting of broken-line cutting
- Half cut press : Cutting pressure to remain after cutting
- Half cut length : Length of sheet to remain after cutting
- Cut length : Length by which the sheet is cut out.

When cutting conditions are set, perform dummy cut (cutting edge alignment) operation (☞P. 3-30) .

Setting value:

CG-FXII Series

SPEED	1 to 10 cm/s (1 cm/s step) 15, 20, 25, 30, 35, 40, 50, 60, 70, 80, 90, 100cm/s
PRESSURE	10 to 20 g (2 g step) 20 to 100 g (5 g step) 100 to 400 g (10 g step)
OFFSET	0.00 to 2.50 mm (0.05 mm step)

CG-FXII Plus Series

SPEED	1 to 10 cm/s (1 cm/s step) 15, 20, 25, 30, 35, 40, 50, 60, 70, 80, 90, 100cm/s
PRESSURE	10 to 20 g (2 g step) 20 to 100 g (5 g step) 100 to 500 g (10 g step)
OFFSET	0.00 to 2.50 mm (0.05 mm step)

Operation Procedure

Refer to the Cut condition settings (☞P. 2-12).
Select [HLF] in the step 1.

Loading a sheet of media

Either a cut sheet or a roll sheet can be loaded on the device.
The pinch rollers and grit rollers hold the sheet in position.
Specify the location of the pinch rollers to match the sheet to be used.

There are three pinch rollers on the main unit. (CG-160FXII (Plus) is four pinch rollers on the main unit.)
When setting a slippery surface material, such as a soft sheet, wider sheet, or film, set a pinch roller to the both sheet ends and the center (CG-160FXII (Plus) set the two pinch roller at the middle).
For a narrow sheet, no need to set the pinch roller in the center of the sheet.

Important! * When in use of the cetrer pinch roller, it may have the mark of the grit roller in the sheet.

Enable to load of the Sheet width

	mm	inch
CG-75FXII(Plus)	90 ～ 1040	24, 30, 36, 40
CG-130FXII(Plus)	90 ～ 1580	24, 30, 36, 42, 48, 50, 52, 60, 62
CG-160FXII(Plus)	90 ～ 1880	24, 30, 36, 42, 48, 50, 52, 60, 62

Maximum cutting area

The maximum cut area (cut (plotting) range) depends on the position of the pinch roller, the tool to be used, and the position of the origin (☞P. 3-52). The white area in the figure below is the maximum cutting area.

	The origin is set at the lower right corner of the area.	The origin is set at the center of the area.
CG-75FXII(Plus)	0.76m×51m	0.76m×3m
CG-130FXII(Plus)	1.3m×51m	1.3m×3m
CG-160FXII(Plus)	1.6m×51m	1.6m×3m

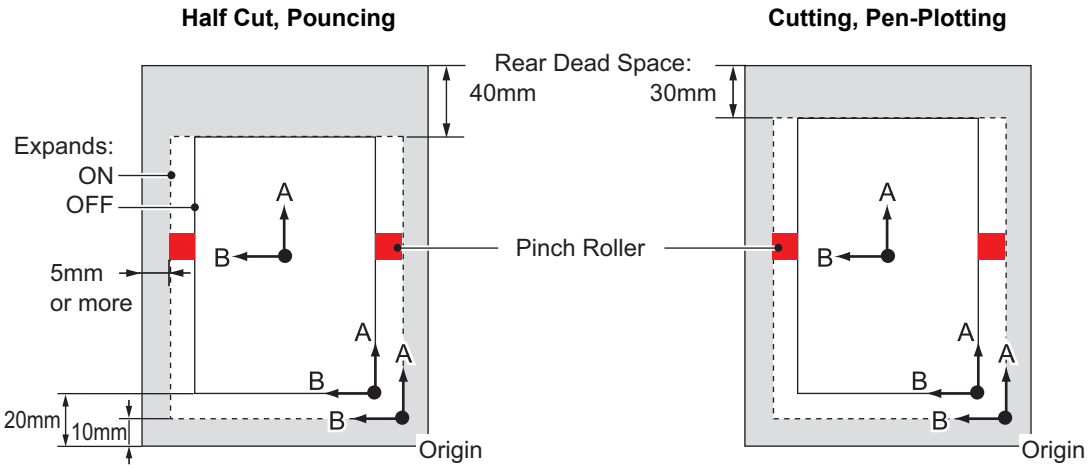

* Dead space: The area in which cutting is disabled.

Sheet detection

The width and length of the sheet can be detected by pressing the jog key [▲] [▼] [◀] [▶] or [END] key according to the attached sheet (☞P. 1-8) .

Important!

* Once the length of a sheet of media has been detected, if the received data is larger than the sheet, only the portion of data that exceeds the sheet will not be cut.
  If the length of a sheet of media is not detected, the device will terminate cutting operation at the time when data goes beyond the sheet.
* If the sheet sensor feature is set to the [OFF], a press on jog key [▲] [▼] [◀] [▶] will cause the device to perform the same sheet detection as with the case where the [END] key is pressed.
  The setting direction of the media is rendered effective.
* The maximum length that can be detected at the front and rear ends of the sheet of media is 3 m.

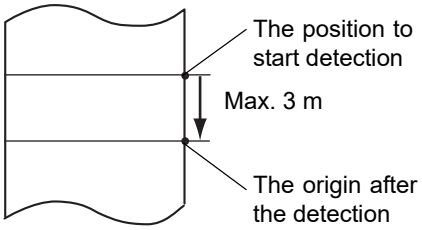

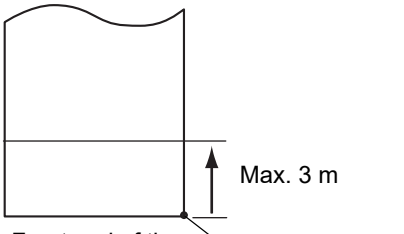

Method to detect a sheet

When a sheet of media is retained with the pinch rollers, the following two displays will appear alternately on the LCD panel.
Press on jog key [▲] [▼] [◀] [▶], in accordance with the direction of the sheet loaded on the device.

ROLL < R > LEAF

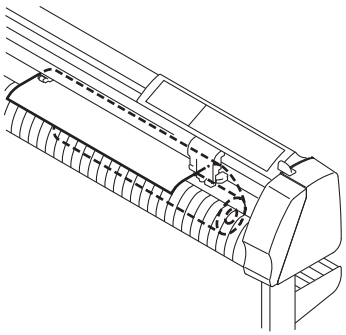

R set
Set a sheet from a rear side.

ROLL ∧ F ∨ LEAF

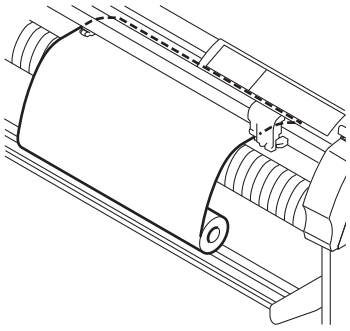

F set
Set a sheet from a front side.

The device detects a sheet of media in the five different methods as shown below.

Key	A roll sheet is loaded to the rear face of the device.	A leaf sheet is loaded to the rear face of the device.	END Only the sheet width is detected.
Detecting method	The sheet width is detected first, then front end of the sheet is detected. 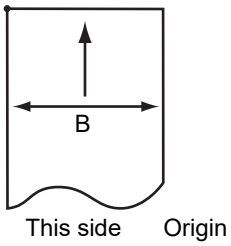 	The sheet width is detected first, then the sheet length is detected by feeding the sheet forward and backward. 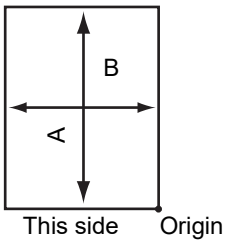 	Only the sheet width is detected. 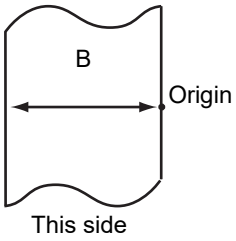
Example of display after the sheet detection	**A=**** B=123**	**A=567 B=123**	**A=**** B=123**
Key	A roll sheet is loaded to the front face of the device.	A leaf sheet is loaded to the front face of the device.	
Detecting method	The sheet width is detected first, then rear end of the sheet is detected. 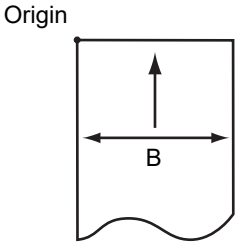 	The sheet width is detected first, then the sheet length is detected by feeding the sheet forward and backward. 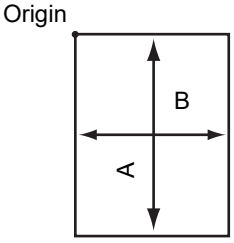 	
Example of display after the sheet detection	**A=**** B=123**	**A=567 B=123**	

Important!

* In the case where the detected dimension is 3 m or more, the display "****" will appear on the LCD.

Hint!

- In the case where a long sheet of media is used or a drawn-out sheet is used from its middle area, the sheet detection will require an extended period of time. In such a case, the detection time can be reduced by detecting only the sheet width.

Loading a leaf sheet

Installation procedure

1. Pass a leaf sheet under the platen.

   Tilt the set lever toward you, raise the pinch rollers and adjust the rightmost end of the leaf of sheet to the lib of the platen.

   Alternatively, align the sheet front parallel to the platen.

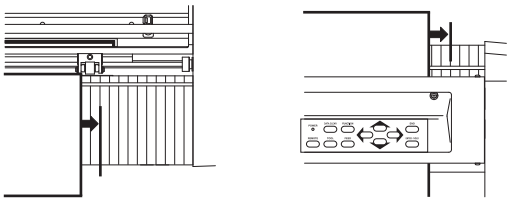

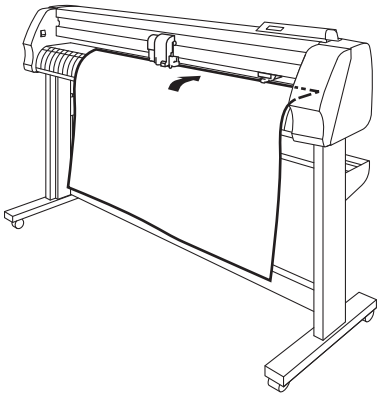

2. Move the pinch rollers according to the sheet width.

   Important! * Change the location of the pinch rollers so that each one is placed 5 mm or more inside the sheet width. If not, the sheet can slip off the pinch rollers while it is being fed.

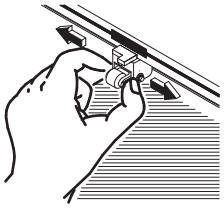

3. Tilt the clamp lever away from you and lower the pinch rollers.

   The display shown on the display panel will change as illustrated below.

   ROLL < R > LEAF

   ROLL ∧ F ∨ LEAF

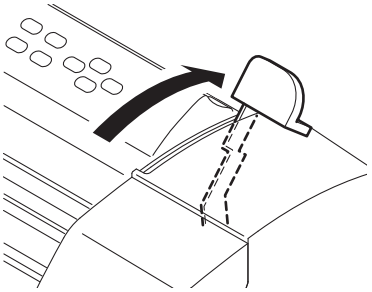

4. Press the jog key [▶] or [▼] to select “LEAF”. (☞P. 2-14)

   [▶] : In the case where the media is loaded from the rear

   [▼] : In the case where the media is loaded from the front

5. In case [ROLL. SELECT] is set [ON], select the number of pinch roller to use.

   Press the jogkey [▲] or [▼] to select.

   PINCH ROLL. : 3

6. Press the [ENTER/HOLD] key.

   Execute the dummy cut operation (☞P. 3-44) after sheet detection.

   The display changes as shown on the right.

   Important! * The device is not able to detect a leaf sheet of which length is 3 m or more.

   Displays the detected size of the leaf sheet.

   A=654 B=459

   Unit: mm

   CT1 020 050 0.30

   Displays the currently specified tool conditions.

Loading a roll sheet

In the case where a roll of sheet is used, roll stays are required to be mounted on the device.
Refer to Assembling Instructions.

Installation procedure

1. Attach the roll bar assembly to the roll stays.

   Place the roll bar assy. in the slit 1 or 2 according to the outside diameter of the roll sheet to be used. Fit the turnback lever.

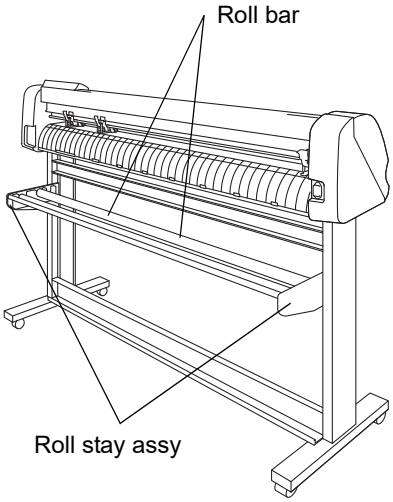

Hint!

- If the outside diameter of the roll sheet is 3 inches or more, put the roll bar assy. in the slit 1 and 2.
- If the outside diameter of the roll sheet is 3 inches or less, put the roll bar assy. in the slit 2 and 3.

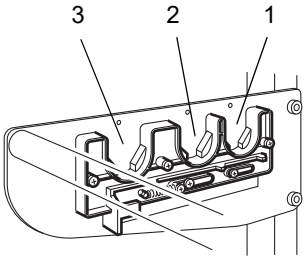

2. Load a roll sheet.

   Place a roll sheet on the roll bar, pass the top end of the sheet through the platen and change the location of the pinch rollers according to the sheet width.

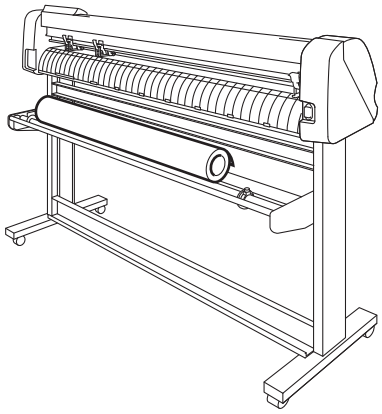

Important!

* Change the location of the pinch rollers so that each one is placed 5 mm or more inside the sheet width. If not, the sheet can slip off the pinch rollers while it is being fed.

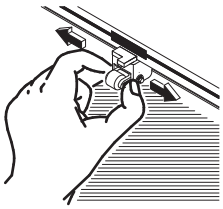

3. Secure the roll sheet with the roll holder.

Move the respective sheet set rings to the rightmost and leftmost ends of the roll sheet and fix them by tightening screws to secure the roll.

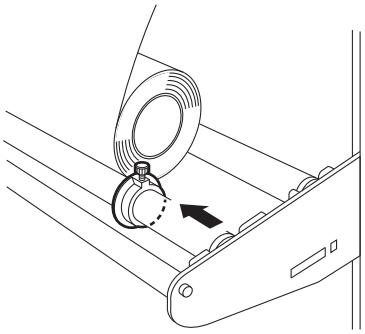

Important!

* Fix a roll holder 2 - 3 mm apart from a sheet end. In case fixing the both ends too tight, sheet feeding may not be performed normally.

4. Lock the roller stoppers.

Press the lock lever toward the rear from the front of the main unit to lock them.

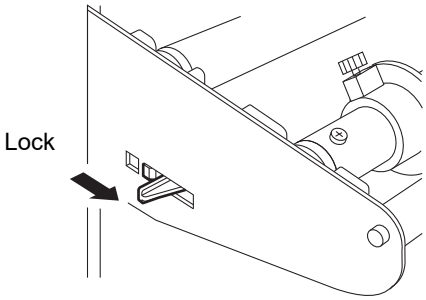

Hint!

- The roll stoppers work to prevent the roll sheet from turning when you draw out the rolled sheet.

5. Hold a sheet.

Draw the sheet to tense it.

Tilt the clamp lever away from you.

- In the case where the power to the device has been turned on:
  he suction fan will rotate to adhere the rolled sheet by suction.
- In the case where the power to the device has been turned off:
  The suction fan will not rotate.

It is, therefore, necessary to tilt the clamp lever away from you while retaining the sheet with your left hand to prevent the sheet from warping.

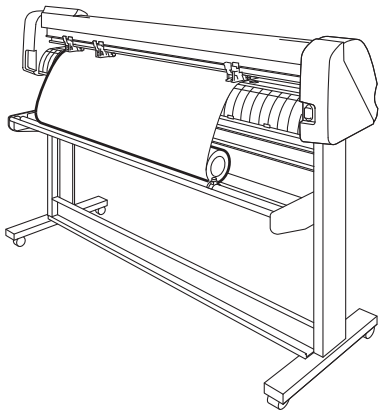

6. Release the roll stopper.

Draw the roll stopper toward you from the front side of the main unit.

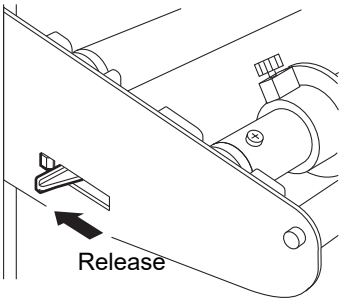

Important!

* If you don't release the roll stopper, the device stop with buzzer during sheet feeding.

7. The display shown on the LCD changes.

Press the jogkey [◀] or [▲] to select [ROLL]. (☞P. 2-17)

[◀] : In the case where the roll sheet is loaded this side

[▲] : In the case where the roll sheet is loaded far side

ROLL < R > LEAF

ROLL ∧ F ∨ LEAF

8. In case [ROLL. SELECT] is set [ON], select the number of pinch roller to use.

   Press the jogkey [▲] or [▼] to select.

PINCH ROLL. : 3

9. Press the [ENTER/HOLD] key

   The device detects the width and front end of the rolled sheet.

   After giving the width of sheet on the LCD, the sheet will conduct a dummy cut (☞P. 3-44) and displays the currently specified tool conditions.

A=** B=559**

⇩

CT1 020 050 0.30

10. Draw out the rolled sheet by the length to be used.

    Press the [FEED] key to draw out the rolled sheet.

Important! * Feed the paper before performing cutting (plotting) to prevent from sheet slipping.

Execute test cutting (plotting)

Execute test cutting (plotting) to confirm the tool configurations.
In the test cutting, the device cuts two different types of squares.

Hint!

- The proper tool configurations results in the following test cutting (plotting)
  - The both two squares cut completely.
  - Base sheet uncut.
  - All square corners cut sharply.
  - No square corners curled-up.

Operation Procedure

1. Confirm a plotter is set to the local mode.

   CT2 020 050 0.30

2. Press (FUNCTION) key.

   FUNCTION

   SUQUARE CUT <ENT>

3. Select [SQUARE CUT], and press [ENTER/HOLD] key.
   Execute test cutting (plotting). Back to the local mode after plotting.

   ENTER/HOLD

   SUQUARE CUT <ENT>

   ⇩

   CT2 020 050 0.30

   If [VIEW FEED] is set to ON, plotting result check feed and head move to the side will be executed.
   (Set the function of VIEW FEED [VIEW FEED] P. 3-66)

   BACK FEED<ENT>

4. Press [ENTER/HOLD] key to return to feed/move and back to the local mode after plotting.

   CT2 020 050 0.30

Reset the cut configurations according to the test cutting (plotting) results.

Cut Condition	Cause
Some parts uncut.	The blade edge cannot touch the part of sheet for the fast cutting speed.
The base sheet has been cut.	Set too high pressure. Too large amount of the blade tip from a holder (☞P. 2-4).
Any of the square corners rounded.	Improper OFFSET value.
Any of the square corners curled-up.	Too large amount of the blade tip from a holder (☞P. 2-4).

Starting cutting (plotting)

After the completion of loading of a tool and sheet and establishment of tool conditions, you can start cutting (plotting).

Hint!

- Check up the following settings before executing cutting (plotting).
  - Setting of the origin (☞P. 2-21)
  - Setting of the origin select (☞P. 3-52)
  - Setting of the commands (☞P. 3-57)
  - Priority of commands (☞P. 3-59)
  - Setting of communication conditions (☞P. 3-58)
  - Setting of the Maximum size of response (☞P. 3-59)

Setting an origin

The origin is a reference point of data to be cut (plotted).
To start cutting (plotting), be sure to specify an origin in prior.

Important!

* Reset the origin point before performing the subsequent data cutting to prevent from cutting on the previous cut (plotted) data.

1. Move the head to a point that is specified as an origin.

   [▶] : Moves the head to the right.

   [◀] : Moves the head to the left.

   [▲] : Moves the sheet away from you.

   [▼] : Moves the sheet toward you.

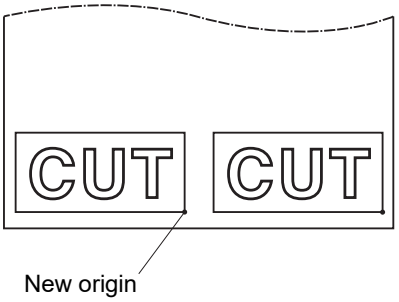

Hint!

- Every time you press the [TOOL] key, the tool will go up and come down alternately. This helps you to set an origin at a correct position with accuracy.

2. Press the [ENTER/HOLD] key to enter the origin.

   After the effective cutting area appears on the LCD, tool conditions will appear there.

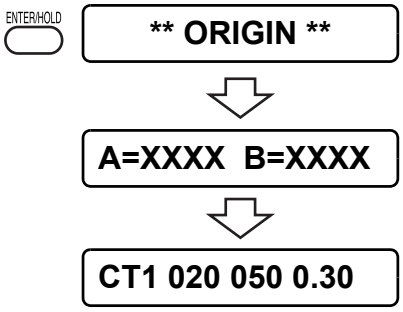

Starting cutting (plotting)

1. After the set of the origin, press the [REMOTE] key.
   The display on the LCD will change over to the remote mode.

REMOTE

CT1 **REMOTE**

2. Send data from the host computer to the device.
   Once the device receives data, the device will give the remaining amount of data while performing cutting (plotting).
   When the device completes cutting (plotting), the display shown on the left will appear on the LCD.

CT1 * 1356KB *

3. If any function that initiates some action or any operation that can affect the command coordinate system is executed during a pause period, the error message shown below will appear on the LCD.

When selecting the cutter

CT1 **REMOTE**

When selecting the pen

PEN **REMOTE**

Putting the cutting (plotting) on hold

To temporarily stop the device during cutting (plotting), press the [REMOTE] key once. Another press on the same key will allow the device to resume cutting (plotting).

Hint!

- If any function that initiates some action or any operation that can affect the command coordinate system is executed during a pause period, the error message shown below will appear on the LCD.

ERR34 DAT REMAIN

In the event that the error message appears on the LCD, press the [REMOTE] key to cut the remaining portion of data or execute data clearing (☞P. 3-10).

Important!

* In case a sheet deviated from the plotter during cut operation, turn off the power immediately, or may hurt the main unit.

Turning the power off

When plotting is completed, press the “ O ” side of the power switch on the front face to turn the power off. To turn the power off, check first whether or not there is data received.

1. Confirm not receiving any data

   Confirm the display indicates the remote mode or the local mode.

CT1 **REMOTE**

CT1 020 050 0.30

Important!

* Leave 5 seconds and more intervals before turning on the power after once turning off.

2. Press the “ O ” side of the power switch.

   The POWER indicator lamp turn off.

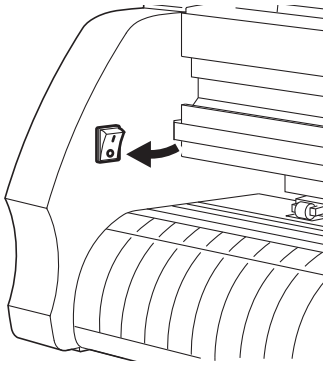

Chapter 3
Function

This chapter describes the functions invoked with the jog key, functions invoked with specific keys, and other functions.

Table of contents

Functions invoked with the jog mode (jog keys) 3-2
Functions invoked with the specific keys 3-6
Functions 3-12
Setting function 3-23

Functions invoked with the jog mode (jog keys)

This section describes the procedure for switching to functions invoked with specific keys, and the operating instructions on each menu.
For detailed menu configuration, refer to Appendix (☞P. 5-11).

Key operation

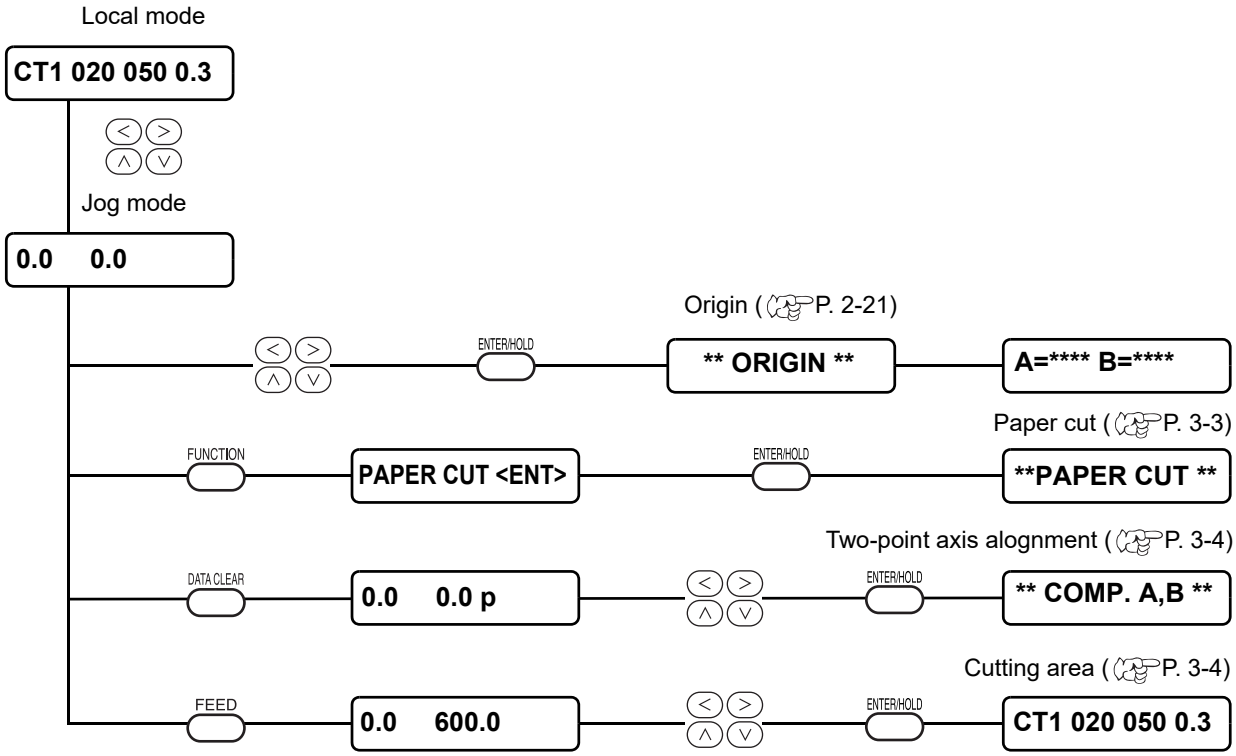

Key movements during jog mode

- ◀ Move the carriage to the left.
- ▶ Move the carriage to the right.
- TOOL Tool up/down
- ▲ Move the sheet to the far side.
- ▼ Move the sheet to the this side.
- REMOTE Light pointer on/off

1. Select the local mode.

   Ascertain first the device does not cutting (plotting) under the REMOTE mode, then press the [REMOTE] key to enter the LOCAL mode.

2. Press any of the jog keys [▲] [▼] [◀] or [▶] to switch to the jog mode.

   Press any of the jog keys to enter the jog mode.

3. Select the jog function.

   Select any of the [FEED], [DATA CLEAR], or [FUNCTION] key according to the settings.

4. Select parameters to determine the setting.

   Select parameters for the functions: origin point setting, cut area setting, and the two point axis alignment setting. Use the jog keys to select parameters.

5. Register/Perform the settings.

   Push on the [ENTER/HOLD] key to register the setting values. Return to the local mode after displaying the setting values for a little while.

   Paper cutting function returns to the local mode after executing cut operation.

Important!

* In case specifying a point in the jog mode, the center of the tool indicates the position regardless the light pointer on/off.

Setting an origin

The origin is a reference point of data to be cut (ploted).

Paper cut

The sheet is cut off at the current location of the tool.
For the paper cutting, the sheet will be cut up to the location 100 mm outside each of the pinch roller. (Do not exceed the maximum paper cutting area.)
Refer to the AUTO CUT for procedures of automatic cutting after plotting (☞P. 3-45).

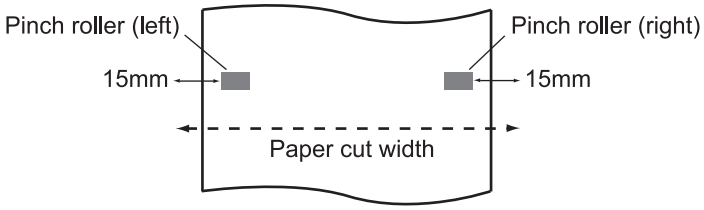

Important!

* In case setting a roll sheet to the front side, reset the sheet configuration.
* When setting the width between the pinch roller 1 and the pinch roller 3 as the maximum width, the available paper cut range is as follows.
  40mm from the inside of the pinch roller 1
  80mm form the inside of the pinch roller 3
* The minimum cut length differs from the sheet type in use. In case the both sides hang free during the paper cut operation, set the longer cut length.

Two-point axis alignment

If setting a ruled line sheet, align the horizontal and vertical axis according to the lines on the sheet.
Axial inclination (q) is corrected between the origin and correction point specified.
To clear the alignment point, raise the sheet set lever.

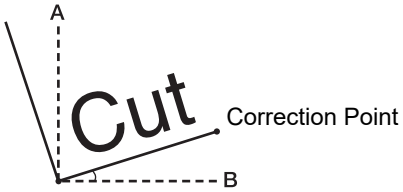

Setting value:

- 45 ～ 45°

Cutting area

An area in which the device performs cutting (plotting) is specified.
The area that has a diagonal line extending from the origin and a given UL (upper left) point is the effective cutting area. If you tilt the clamp lever toward you, the cut area specified will be cleared.

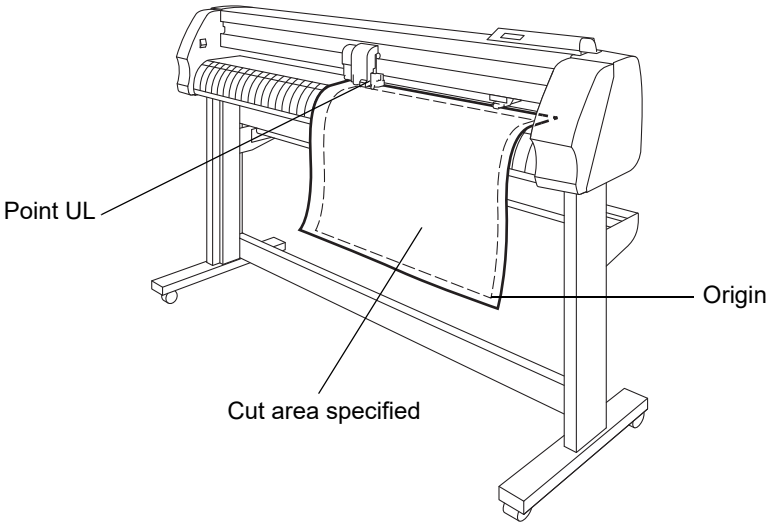

Important!

* Be sure to specify an upper left point in the area that is located in the normaldirection from the origin.
* Be sure to set an origin in the cutting area. If you establish an origin outside the cutting area, an operation error will result.

Digitization operation

Digitization operationCoordinates of the plotted figure as from the origin are displayed on the host computer.
When the device receives a digitization command (DP) from the host computer, the digitization operation is enabled.
To conduct digitization, install a sheet with patterns to be used to specify points on the device.

Hint!

- The digitization operation is only enabled in the case where the application software that incorporates a digitization function. Refer to the instruction manual for the application software for how to use the digitization function.

Operating procedure

1. Set the device in the remote mode. The device receives the digitization command from the host computer.
   The display on the LCD will change as illustrated on the left.

   PEN ** REMOTE **

   **** DIGITIZE ****

2. Move the pen with a jog key [▲] [▼] [◀] or [▶] until the pen tip reaches a given point of the pattern.
   Coordinates as from the origin will be displayed.

   100.1 250.5

   Hint!

   - If you specify the step unit to a smaller value using the jog step function, you may specify the desired point with increased accuracy (☞P. 3-61).

3. Press the [ENTER/HOLD] key.
   The information on the point on which the pen tip rests will be sent to the host computer.

   ENTER/HOLD

   PEN ** REMOTE **

Functions invoked with the specific keys

This section describes the procedure for switching menus by the specific keys and the operating instructions.
For detailed menu configuration, refer to Appendix (☞P. 5-1).

Key operation

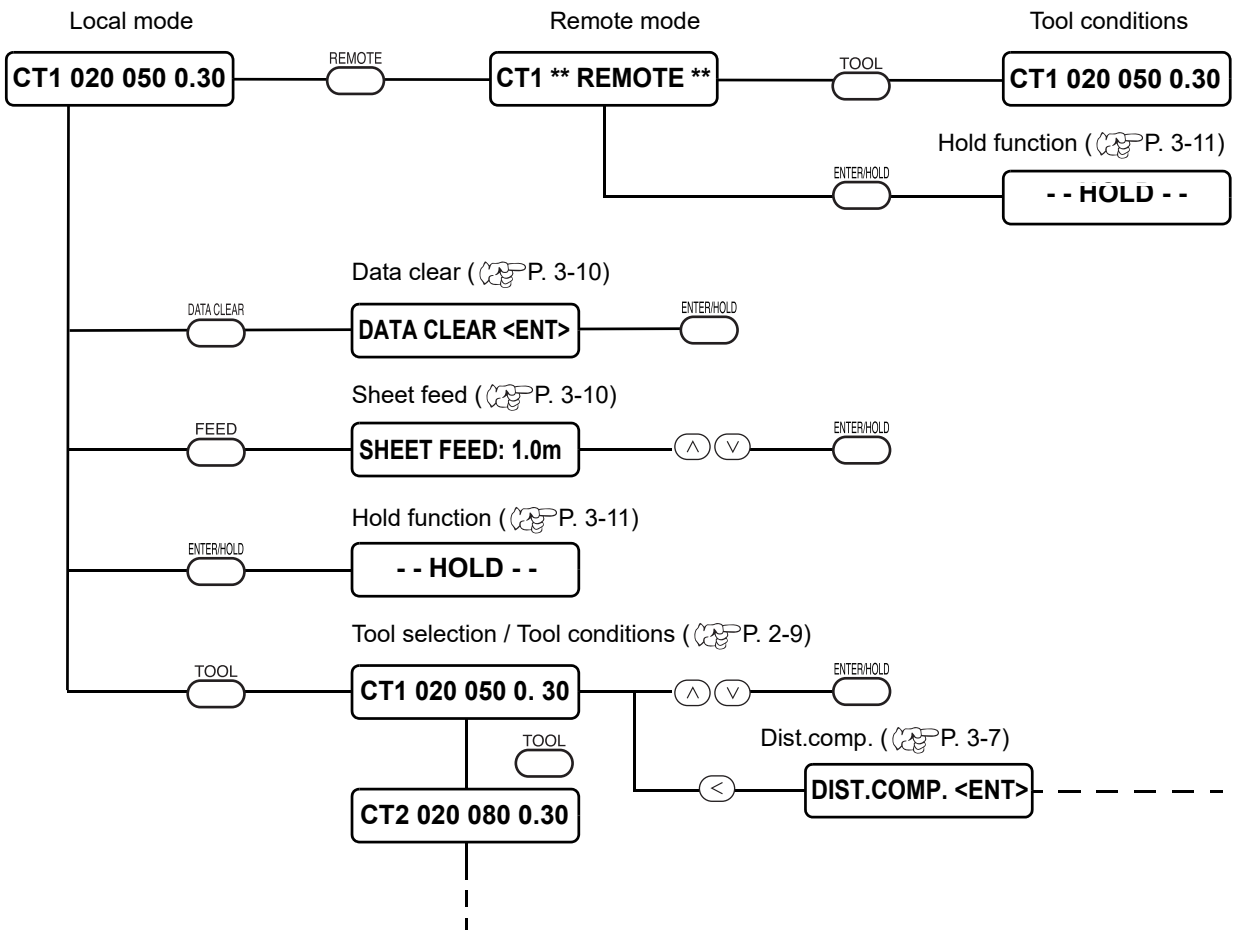

Switch between remote and the local mode [REMOTE]

Switch between remote and the local mode each time pushing on the [REMOTE] key.
During cut (plot) operation, push on the [REMOTE] to interrupt cutting temporarily. Push on the key again to restart the cutting operation.

Hint!

- In a remote mode, push on the jog keys [▲] [▼] to change the cutting (plotting) speed.
  The changed cutting (plotting) speed cannot be stored.
  Turn off the power supply to return to the toll configuration values.

Important!

* [REMOTE] key is effective after detecting a sheet.

* * In case temporarily interrupt cut operation, some functions may not be effective with the error message following below.
In that case, complete the remaining data cutting (plotting), or push on the [DATA CLEAR] key to execute data clear function (☞P. 3-10).

ERR34 DAT RE MAIN

Set the tool configurations [TOOL]

Set the distance compensation and cutting (plotting) configurations.
For details on setting cutting (plotting) configurations refer to Tool conditions setting. (☞P. 2-8)).

Set the distance compensation [TOOL]

In case executing a long data cutting, the cut length may have an error depends on the thickness of the sheet. Additionally, the diameter difference between the right and the left grit rollers may cause the sheet shirting distance difference between the both sheets. This function compensates those errors.
One type of the distance compensation can be set for each tool configuration, totally eight types can be set.

Important! * If altering the tool number on the host computer, the altered tool number will be applied to the correction values. Carefully specify the tool number by commands.

Find compensation value

Compensation value = Measurement of the OFF line – Reference length input

Example)
Measurement of the OFF line = 999.0 mm
Reference length input = 1000 mm
999.0 – 1000 = –1.0 mm/Compensation value

As a result, the compensation value to be input will be “–1.0 mm.”

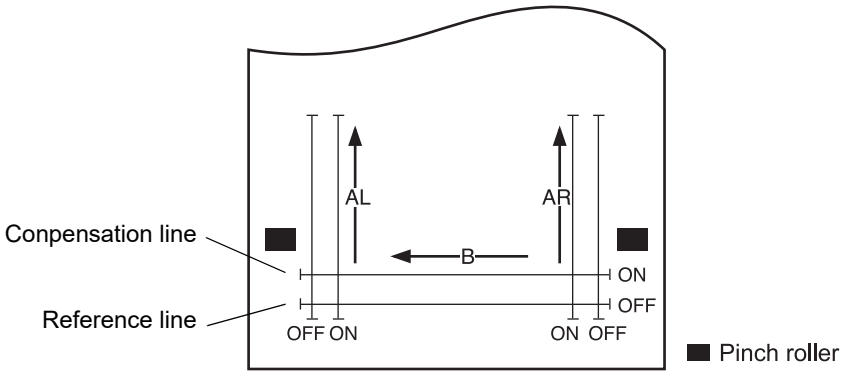

Setting value:

Reference value
- For “mm”
  A-axis : 500, 1000, 1500, 2500 mm
  B-axis : 200, 400, 600, 800, 1000, 1200. 1400, 1600 mm
  * Set value of the B direction differs according to the model size in use.
- For “inch”
  A-axis : 24, 36, 48, 60, 72, 96 inch
  B-axis : 6, 12, 18, 24, 30, 36, 42, 48 inch

Conpensation value
A-axis : ±2 % (0.1 mm step)
B-axis : ±2 % (0.1 mm step)
Plotting offset
Push on the (TOOL) in a local mode.

Setup steps

1. Push on the [TOOL] in a local mode.
   Tool configuration displayed. Cursor blinking on the [SPEED] value.

   TOOL — CT1 020 050 0.30

2. Push on the jog key [◀].
   Cursor blinking on the tool conditions.
   Push on the jog keys [▲] [▼] to change the tool conditions.

   ◀ — CT1 020 050 0.30

3. Push on the jog key [◀].
   Push on the jog key [▶] in [DIST.COMP.] mode to return to the tool conditions selection.

   ◀ — DIST.COMP. <ENT>

4. Push on the [ENTER/HOLD] key.
   The reference length (unit: mm) that was used in the previous correction will appear on the LCD.
   If no distance compensation has been performed, the minimum reference length will appear on the LCD.

   ◀ — A=500 B=200

   Hint!
   - When you change the unit of length [mm / inch] from the previous correction, it is displayed as follows.

     A=---- B=----

5. Change the reference length of the A direction (cross direction) with the jog keys [▲] [▼].

   ▲▼ — A=1000 B=200

   Important!
   * If you change the reference lengths in direction A, the distance correction value (AR, AL) will be cleared.

6. Determine the reference length of the A direction by pushing on the [ENTER/HOLD] key or the jog key [▶].
   The both AR and AL direction lengths refer to the A direction length.

   ENTER/HOLD — A=1000 B=200

7. Change the reference length of the B direction (horizontal direction) with the jog keys [▲] [▼].

   ▲▼ — A=1000 B=400

   Important!
   * If you change the reference lengths in direction B, the distance correction value (B) will be cleared.

8. Push on the [ENTER/HOLD] key to determine the reference length of the B direction.

   ENTER/HOLD — DRAW SHIFT= 0mm

9. Use the jog keys [▲] [▼] to specify the drawing position of the distance correction adjustment pattern.
   Offset the all the line segment (AR, AL, B) inside of a sheet.

   ▲▼ — DRAW SHIFT=10mm

10. Push on the [ENTER/HOLD] key.
    The device plots an adjustment pattern.

Important!

* If no sheet is placed on the device, or the sheet size is too small to plot a reference length, the device will not conduct plotting and proceed to the correction value inputting stage.

11. Upon completion of plotting, the device will give the current compensation value on the LCD.

AR=0.0 AL=0.0

12. Measure the ON line along A- and B-axis.
    Measure the line without a sheet by tilting the clamp lever toward you.

13. Perform step1 to step11.
    Since there is no sheet set, the input compensation value screen will be displayed.

14. In case the reference value and the actual value differ, change the correction value with the jog keys [▲] or [▼].

AR=1.0 AL=0.0

15. Determine the AR direction correction value with the [ENTER/HOLD] key or jog key [▶].

ENTER/HOLD

AR=1.0 AL=0.0

16. Input the AL direction correction value as the step14. [▲] [▼].

AR=1.0 AL=1.5

17. Determine the AL direction correction value with the [ENTER/HOLD] key or jog key [▶].

ENTER/HOLD

B=0.0

18. Change the B direction correction value with the jog keys [▲] or [▼].

ENTER/HOLD

B=0.5

19. Determine the B direction correction value with the [ENTER/HOLD] key.
    Return to the local mode.

ENTER/HOLD

CT1 020 050 0.30

Feed the paper [FEED]

The sheet is fed by the length to be used.
In the case where a roll sheet is used or a long-dimension data is to be cut (plotted), the sheet has to be fed by the length to be used to provide an allowance. In addition, displacement of the sheet can be checked by feeding the sheet.

Setting value:

For “mm”: 0.1 m to 51.0 m (in increments of 0.1 m)
For “inch”: 1 to 167 feet (in increments of 1 ft.)

Setup steps

1. Push on the [FEED] key in a local mode.

2. Press the jog key [▲] [▼] to set the feed amount.

3. Push on the [ENTER/HOLD] key.
   The sheet is fed from the origin.

In case the sheet length is shorter than the set value, sheet feeding stops as displaying the fed sheet length.
If this display appears on the LCD, press any key to reset it.

**** STOP : 0.3m ****

Hint!
- To interrupt the sheet feed, press the [END] key.

Clear the data [DATA CLEAR]

Clear the data to interrupt the data cutting (plotting).
In case data not cleared, the received data will be cut when returning to the remote mode.

When data clear is executed and data is received in remote mode, new data is cut (plotted).

DATA CLEAR <ENT>

Hint!
- After the execution of data clearance, the received data will remain in the receiver buffer. It is, therefore, possible to cut (plot) the data in repetition using the plural sheet cutting function.

Important!
- * Do not execute the data clear function during data sending.

Modify the sheet displacement [ENTER / HOLD]

In the case where the sheet slips out of position during cutting (plotting) of long-distance data, the hold function is used to put the device on hold to allow the operator to correct the displacement of the sheet and re-start the operation after the completion of correction.
A press on the [ENTER / HOLD] key during cutting (plotting) will put the device on hold.

Hint!

- Under the local mode, the [ENTER/HOLD] key has to be held pressed for approximately 1.5 seconds.

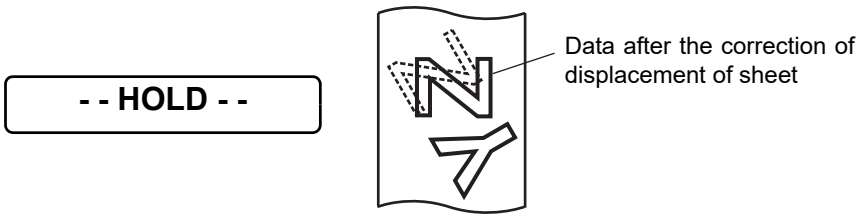

Important!

* Be sure to execute the hold function at the boundary between characters.
  If you execute the hold function while the device is cutting (plotting) a line segment of a character, the starting point and end point of cutting (plotting) will not meet.
* When correcting the displacement of the sheet, move neither the carriage nor the pinch rollers. If they are moved out of position, a damage to the device or an error will arise.
* After executing HOLD, put the pinch roller down by pushing over the clamp lever. If they are held raised, the hold function cannot be terminated.

Enter the registration mark detection mode [END]

Push on the [END] key to enter the registration mark detection mode from the local mode. If the registration mark detection configuration is set to OFF, cannot enter the registration mark detection mode. (☞P. 3-30).

The [END] key is also used as the cancel button or returning to the previous setting.

Functions

This section describes the procedure of switching function menu and the operating instructions.
For detailed menu configuration, refer to Appendix (☞P. 5-1).

Key operation

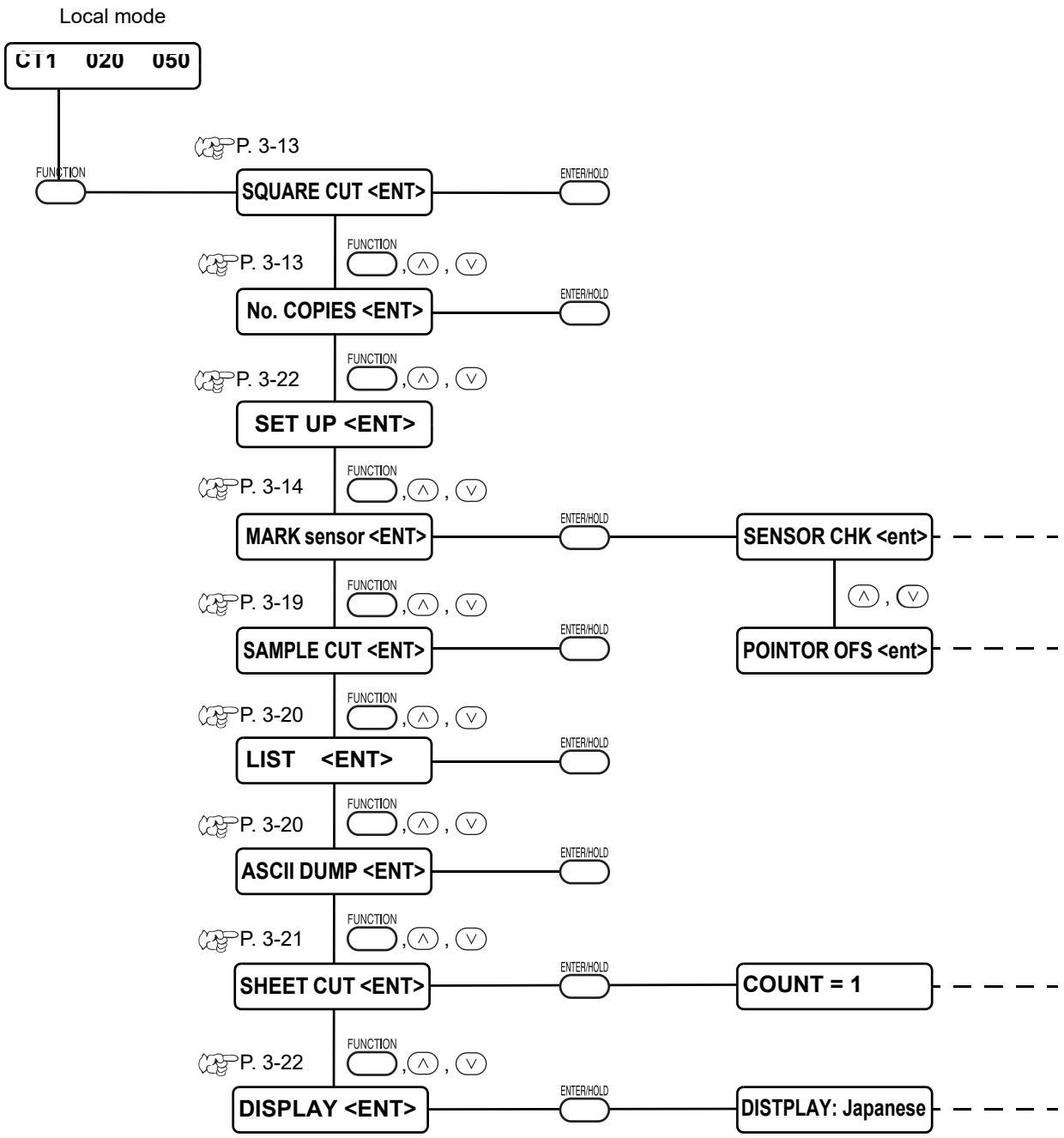

1. Select the local mode.

   Ascertain first the device does not cutting (plotting) under the REMOTE mode, then press the [REMOTE] key to enter the LOCAL mode.

2. Press [FUNCTION] key to switch to the function menu.

   Display functions during each pushing on the [FUNCTION] key or the jog keys [▲] [▼].

3. Select a function.
   The following functions perform the operation.
   [SQUARE CUT], [No.COPIES], [SAMPLE CUT], [LIST], [ASCII DUMP], [SHEET CUT]

   Other following functions perform more detail setting.
   [MARK sensor], [SET UP], [DIAPLAY]

4. Perform functions and entering the setting values.
   Perform test cutting and registration mark sensor checking, etc.

Test cutting [SQUARE CUT]

In the case where you have changed the type of sheet or tool and cutting conditions have been changed correspondingly, the test cutting function is used to execute test cutting to check that the cutting conditions such as SPEED, PRESSURE and OFFSET are appropriate (☞P. 2-20).
In the test cutting, the device cuts two different types of squares.

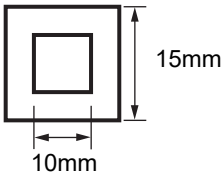

Hint!

- Change the value of the cut condition depending on the cutout of the square. (☞P. 2-20)
- [SQUARE CUT] is executed at the current tool position.
- If [VIEW FEED] is set to ON, plotting result check feed and head move to the side will be executed. (☞P. 3-66)

Cut (plot) the same data on multiple sheets [No. COPIES]

This function is used to perform cutting (plotting) of the received data on two or more sheets.
The device stores the received data in the receiver buffer to enable cutting (plotting) in repetition on as many as 999 sheets.

When the device receives new data, the data stored in the receiver buffer will be updated.
Cannot cut the previous data on multiple sheets.

Setting value (input of numeric data):

Number of copies :1 to 999 sheets
Margins between the copied data :0 to 30 mm

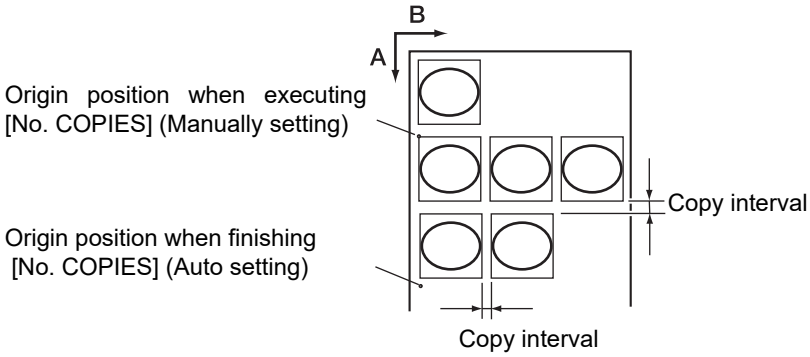

Important!

* If the plural sheet cutting is executed immediately after cutting under the remote mode, the data will be cut (plotted) overlapped. To avoid this trouble, re-set an origin.
* While the device is executing the plural sheet cutting, it ignores data sent from the host computer. To send plural pieces of data from the host computer to the device, the data has to be sent while providing an interval of 10 seconds or more between any two pieces of data. If two pieces of data are sent from the host computer to the device within 10 seconds, the two pieces of data will be subjected to the plural sheet cutting.
* If the origin updated inside the device during setting up the two-point axis alignment fails to fall within the effective cutting area, the device will not cut the data.
* The device cuts divided cut data by the specified number of sheets without dividing the data.
* In the event that any error appears on the LCD, refer to Chapter 4.

Check the sensor for the registration mark detection [MARK sensor]

Check the sensor.

Important!

* Affects to the registration mark detection noise.

Registration mark condition

For the conditions of printed register marks, refer to "Warnings on inputting data with registration marks" (☞P. 3-24) .

Setting Procedure

1. Set a plotter to local mode.

CT1 020 050 0.30

2. Enter the jog mode by pushing on the jog keys [▲] [▼] [◀] and [▶].

3. Lighten the Light Pointer by pushing on the [REMOTE] key.

4. Shift the Light Pointer to the registration mark detection position by pushing on the jog keys [▲] [▼] [◀] and [▶].

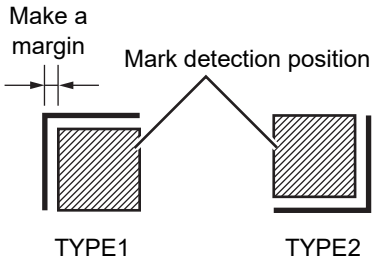

5. Return to the local mode after completing the jog mode with the [END] key.

6. Push on the [FUNCTION] key.

FUNCTION

SQUARE CUT <ENT>

7. Select [MARK sensor] by pushing on the jog keys [▲] [▼].

MARK sensor <ENT>

8. Push on the [ENTER/HOLD] key.

SENSOR CHK <ent>

9. Push [ENTER/HOLD] key after confirming [SENSOR CHK] is displayed.

PAPER HOLD :OFF

10. Set the each configurations, paper hold ON/ OFF, length of the registration mark, shape of the registration mark, and speed of the registration mark detection.

For details on setting the [PAPER HOLD], [SIZE], [FORM], refer to the [MARK DETECT] setting procedure. (☞P. 3-24)

The setting value of the [SPEED] is set to 10cm/s to 30cm/s.
Change the value according to the test results.

PAPER HOLD :OFF

SIZE : 7mm

FORM : TYPE1

SPEED : 20cm/s

11. Perform registration mark detection 1 (*1) with the jog key [▶].
Perform registration mark detection 2 (* 2) (set the detection speed automatically.) with the jog key [◀].

*1) Detect operation 1

1. Scan to the B direction (plus direction) to detect the line.

   Buzzer sounds when the line detected. If the line cannot be detected, no buzzer sounds.

2. Scan to the B direction (minus direction) to detect the line.
3. Scan to the A direction (plus direction) to detect the line.
4. Scan to the A direction (minus direction) to detect the line.
5. Confirm buzzer sounds at each operation.

   In case no buzzer sounds, retry detection after changing the detection speed.

   If no buzzer sounds even after changing the detection speed, check the registration of mark condition and contact us.

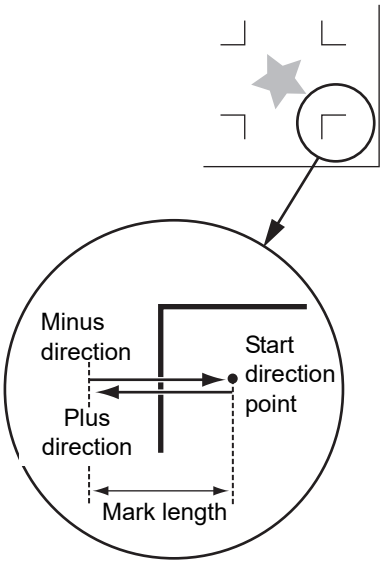

Scan to the B direction

*2) Detect operation 2

1. Set the detection speed at 10cm/s.
2. Scan to the B direction (plus direction) to detect the line.
3. If succeed to detect the line, back to the detection starting position and perform "detection operation 1".

   If fails to detect, back to the detection starting position and increase the detection speed by 5cm/s. Retry the detect operation from "Detect operation 2 Step 2".

4. When all detections succeed in the "detect operation 1", determine the detection speed.

   When all detections succeed in the "detect operation 1", determine the detectio speed.

   In case no registration mark detected even though increasing the detection speed up to 30cm/s, check the registration of mark condition contact us.

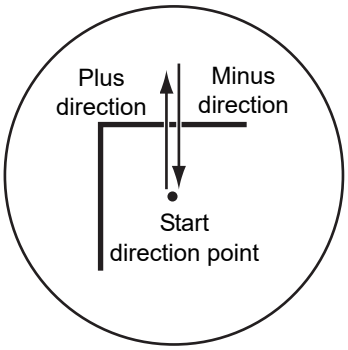

Scan to the A direction

Correct the light pointer position [MARK SENSOR]

In case fails to recognize a registration mark, adjust the light pointer position.

Setting Procedure

1. Attach a roller ball pen [for a plotter use] on the tool holder.

   Important! * Be sure to use the applied pen for the pen adapter(not marketed pens).

2. Confirm the plotter is in the local mode. **CT1 020 050 0.30**
3. Push [FUNCTION] key. FUNCTION **SQUARE CUT <ENT>**
4. Select [MARK SENSOR] by pushing jog keys, [▲] [▼]. **MARK sensor <ENT>**

5. Push [ENTER/HOLD] key.

ENTER/HOLD

SENSOR CHK <ent>

6. Select [POINTER OFS] by pushing jog keys, [▲] [▼].

ENTER/HOLD

SENSOR OFS <ent>

7. Push [ENTER/HOLD] key.

   The light pointer on, and moves to a center of a crisscross pattern to plot a 10mm-by-10mm crisscross pattern.

ENTER/HOLD

A= - 3.9 B= - 6.0

8. Press the jog key [▲] [▼] [◀] [▶] to move the light pointer so that the center of the light pointer and the center of the cross pattern match.

9. Push [ENTER/HOLD] key.

   Return to the local mode after registered the adjustment position.

ENTER/HOLD

CT1 020 050 0.30

Important!

* The value registered in the [POINTER OFS] cannot initialize even if executing the [SETUP RESET].

Alignment of MARK SENSOR

The offset value of the cutter and the mark sensor can be adjusted.
Set the sheet on which the register mark is printed.

Setting Procedure

1. Install a cutter in the tool holder.
2. Confirm the plotter is in the local mode.

   FUNCTION — **CT1 020 050 0.30**
3. Press the [FUNCTION] key.

   DATA CLEAR <ENT>
4. Select [MARK SENSOR] by pressing the jog key [▲] [▼].

   MARK sensor <ENT>
5. Press the [ENTER/HOLD] key.

   ENTER/HOLD — **SENSOR CHK <ent>**
6. Select [SENSOR OFS] by pressing the jog key [▲] [▼].

   SENSOR OFS <ent>
7. Press the [ENTER/HOLD] key.

   ENTER/HOLD — **A= 0.0 B= 0.0**

   After detecting the register mark (one point), five additional lines are cut every 0.2 mm on the center line and on both sides of the center line of the detected register mark.

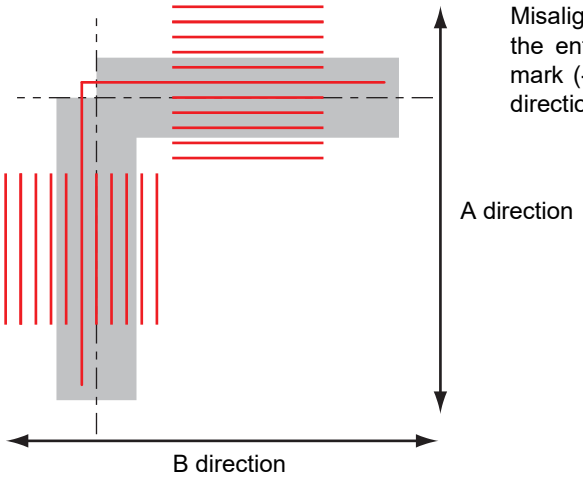

Misaligned by +0.2 mm from the enter line of the register mark (---) in the A and the B direction.

8. Enter the corrected value (mm) by pressing the [▲] [▼] for the A direction, or the [◀] [▶] for the B direction.

   A= - 0.2 B= - 0.2

   Press the [ENTER/HOLD] key.
9. Press the [ENTER/HOLD] key.

   ENTER/HOLD — **CT1 020 050 0.30**

   The plotter will return to the local mode after registering the compensation value.

Hint!

- The setting values are kept in memory even when the power is turned off.
- The sensor offset value selected by this operation is not initialized by SETUP RESET operation.

Examine the cut error [SAMPLE CUT]

In the event where the data cannot be cut properly, the cause of abnormality is investigated cutting the sample data stored in the equipment.

1. Press the [FUNCTION] key in the local mode.

2. With jog keys [▲] or [▼] With jog keys, select “SAMPLE CUT.”

SAMPLE CUT <ENT>

3. Press [ENTER/HOLD] key.

4. With jog keys [▲] or [▼], select sample data to cut.
   - From the following 2 samples, select data to cut.
   - Proceed to the procedure 7 if “Cut” is selected and to the procedure 5 if “LOGO” is selected.

Cut < ent >

Cut

LOGO

5. Press [ENTER/HOLD] key.

6. With jog keys [◀] and [▶], select magnification of sample data to cut. (when LOGO is selected)
   - You may select within the range of 1 to 999%.

LOGO 100% < ent >

7. Press [ENTER/HOLD] key to start cutting.
   - When sample cut is made, the data stored in the receiving buffer of the equipment are deleted.

CUT1 **REMOTE**

The result of Sample Cut

- The sample data is cut properly but other data cannot be cut properly.
  -> It is considered that abnormality exists on the host computer side.
- Tthe sample data and other data cannot be cut properly.
  -> Increase the set value of [Corrective Pressure Offset] (refer to the Operation Manual of the equipment side) and increase the pressure when the cutter goes down.

Output the list of configurations [LIST]

With this function, the device plots tool conditions, communication conditions and functions setting conditions for your notes or for facsimile sending at the of maintenance.
Use a pen as a tool and plot on a leaf paper (A4 size paper in portrait orientation).

```
LIST (CG  IIc-13Fv1.04)

(1) PEN PARAMETER          DIST.COMP        XR        Y         XL
   CT1 020 050 0.30                        1.00000  1.00000  1.00000
   CT2 020 080 0.30                        1.00000  1.00000  1.00000
   CT3 005 150 0.30                        1.00000  1.00000  1.00000
   CT4 020 060 0.30                        1.00000  1.00000  1.00000
   CT5 020 070 0.30                        1.00000  1.00000  1.00000
   PEN 040 050                             1.00000  1.00000  1.00000
   PIN 040 080 002P                        1.00000  1.00000  1.00000
   HLF 020 050 0.30                        1.00000  1.00000  1.00000

(2) INTERFACE PARAMETER
   MGL-IIc :  9600, 8, NON , 1, HARD  , 0.025mm, 10s
   MGL-Ic1 :  9600, 8, NON , 1, HARD  , 0.05mm , 10s
   AUTO    :  9600, 8, NON , 1, HARD  , 10s

(3) FUNCTION PARAMETER
   DISPLAY        = English
   MARK DETECT    = OFF  ON  ON  10mm 0.00mm 0.00mm TYPE1 1 1 10cm/s
   COMMAND        = MGL-IIc
   DEVICE No.     = 00
   CUT MODE       = NORMAL
   ORGN SELECT    = LOWER RIGHT
   EXPANDS        = OFF
   AUTO.CUT       = OFF  30mm 3STEP
   ROTATION       = OFF
   BUZZER         = ON
   DIVISIONcut    = OFF ON  ON
   HALF CUT       = OFF  0g 0.5mm  10mm
   POUNCING       = OFF
   PRIORITY       = HOST
   DISTANCE       = 51m
   SHEETsensor    = ON
   UP SPEED       = AUTO
   JOG STEP       = 1.0mm
   MM/INCH        = MM
   FEED OFFSET    = 000cm
   DUMMY CUT      = ON
   SHEET TYPE     = STANDARD
   SORTING        = OFF
   POINTER OFF
```

Output the received data by the ASCII code [ASCII DUMP]

This function is used to cause the host computer to send data to the device, then cause the device to plot the communication conditions of the interface through which it receives the data, and finally cause the device to plot the data received in ASCII format.
To execute the dump, be sure to use a pen as the tool.
The dump can be executed with the interface to which the host computer is connected.

Hint!

- To put the dump on hold, press the [REMOTE] key to change over the operation mode to the local ode and execute the data clearing (P. 3-6).

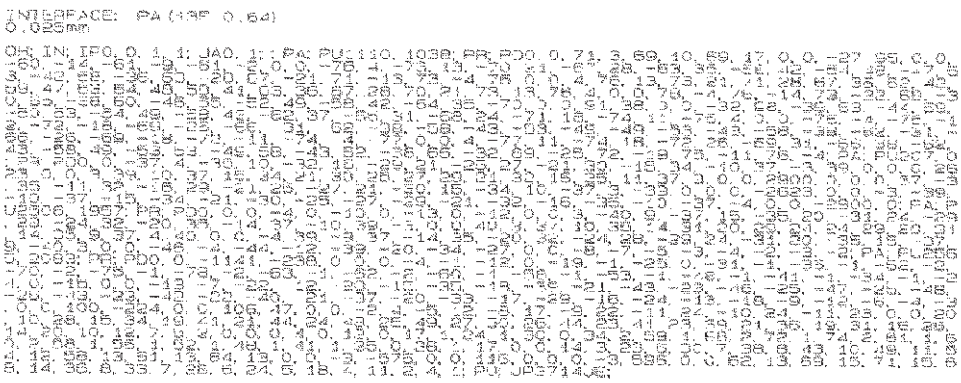

Cut a roll sheet at intervals automatically [SHEET CUT]

Cut the roll sheet continuously according to the set configurations.
Make a fixed size cutting sheet.

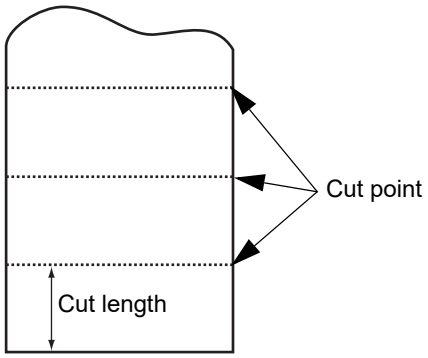

Important!

* When setting the width between the pinch roller 1 and the pinch roller 3 as the maximum width, the available automatic sheet cut range is as follows.
40mm from the inside of the pinch roller 1
80mm form the inside of the pinch roller 3

Setting value

Number of cutting sheet :1 to 999,999 sheets
Cut length :1 to 10,000 mm
Front cut off :0 to 30 mm

Setup steps

1. Make sure that the plotter is in local mode, and then press the [FUNCTION] key. — FUNCTION — **SHEET CUT <ENT>**
2. Press the [ENTER/HOLD] key. — ENTER/HOLD — **COUNT = 1**
3. By pressing the jog key [▲] or [▼], set the number of times cutting is to be performed. — ▲▼ — **COUNT = 100**
4. Press the [ENTER/HOLD] key. — ENTER/HOLD — **SPACE = 000 mm**
5. Set the cut length (mm) by pressing the jog key [▲] or [▼]. — ENTER/HOLD — **SPACE = 1000 mm**
6. Press the [ENTER/HOLD] key. — ENTER/HOLD — **FRONT CUToff = 0**
7. Set the front cut off length by pressing the jog key [▲] or [▼]. — ▲▼ — **FRONT CUToff = 10**
8. Press the [ENTER/HOLD] key after completing the settings. — ENTER/HOLD — **CN : 10 / 999999**
   The number of cut sheets is displayed while cutting operation is being performed.

Hint!

- When “Front cut off” is enabled, the leading edge of the sheet is cut at star of [SHEETCUT].
  A constant cut length may not be obtained if the leading edge is askew or if the cut end of the sheet is not neat.
  The “Front cut off” is designed to cut the leading edge at start of operation to ensure a constant cut length.

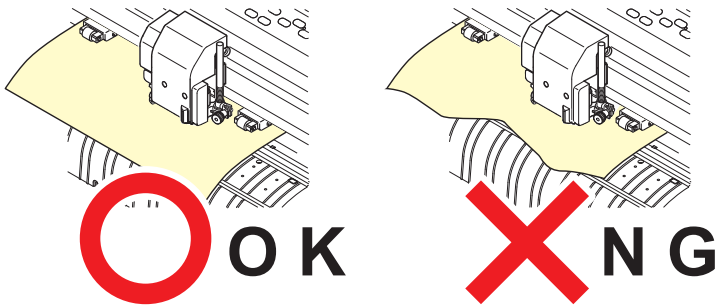

Switch the displayed language [DISPLAY]

The displayed language can switch to other languages as follows.

Setting value
- Japanese
- English
- German
- French
- Spanish
- Italian
- Portuguese

Important!

* The default is set to English.
Change the language as needed.

Set each functions [SET UP]

(Refer to Setting Function ☞P. 3-23)

Setting function

This section describes the configurations in the function menu.
For detailed menu configuration, refer to Appendix. (☞P.5-13)

Key operation

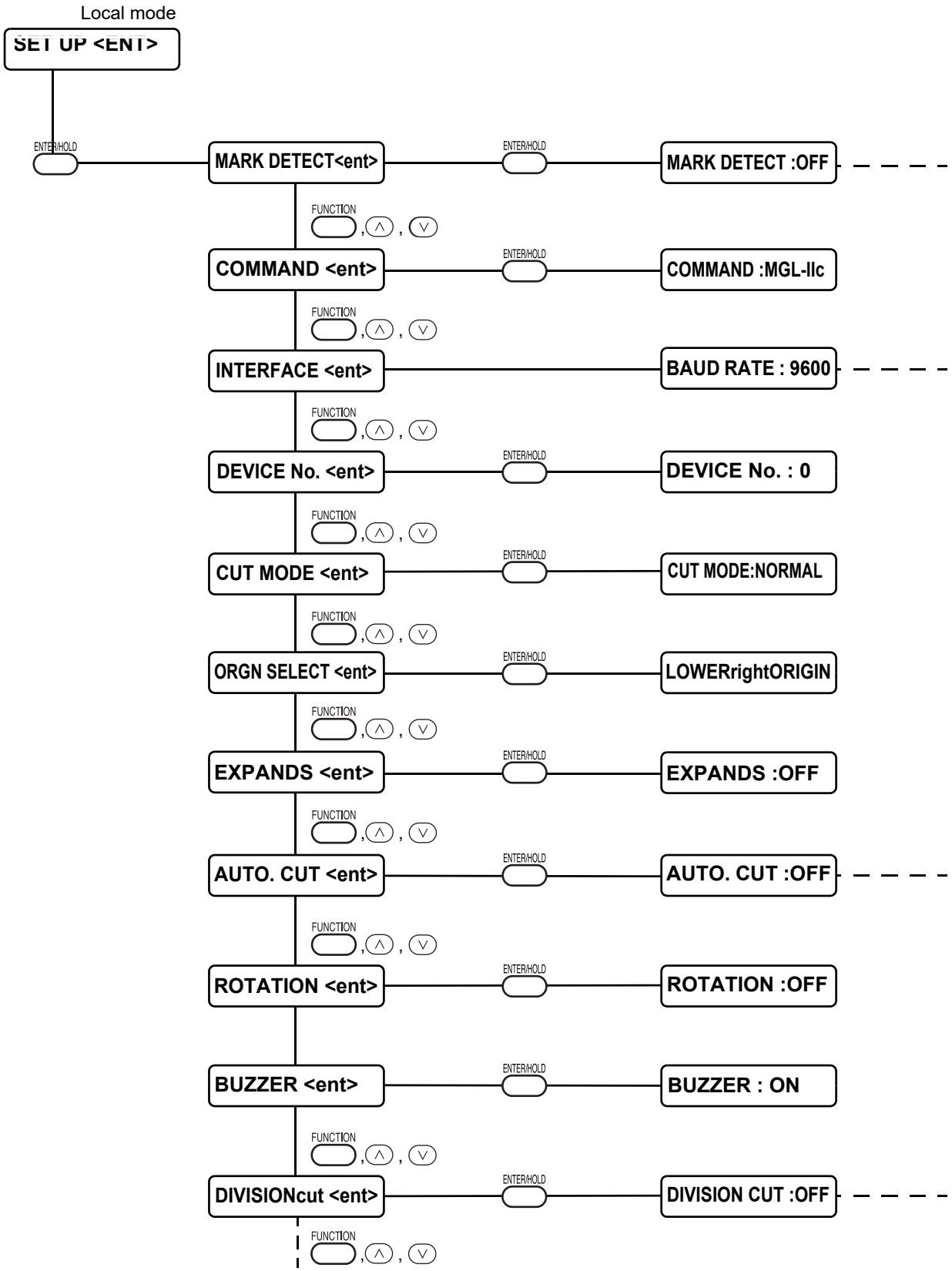

Set the operation of the registration mark detection [MARK DETECT]

This function is used to automatically detect a registration mark.
Correct the inclination of the sheet loaded on the device, origin of plotting and distance between registration marks. Then, cut the contour of a picture pattern printed on a seal.
The following types of the registration marks are to be read.

The TP4 is used to perform trapezium correction for adjusting the sheet feeding length. If not perform the trapezium correction, no need for the TP4, but cutting distortion will increase.

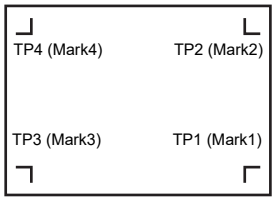

Mark Form : TYPE1

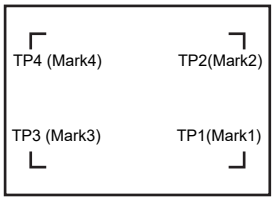

Mark Form : TYPE2

Warnings on inputting data with registration marks

There are some limitations on inputting data with registration marks.
In order to fully utilize this function, please read the following datails carefully.

Important!

* The registration mark described in this paragraph means a registration mark that is used to detect the sheet inclination and the length of A- and B-axis. It is different from a mark for trimming.

Size of the registration marks

The registration mark length must be 4 - 40mm on a side.
The line width of mark shall be equal to or more than 0.3 mm and equal to or less than 1 mm.

Please refer to [The size of, and the distance between, registration marks] (☞P. 3-27) for the length of the registration line in accordance with the data.

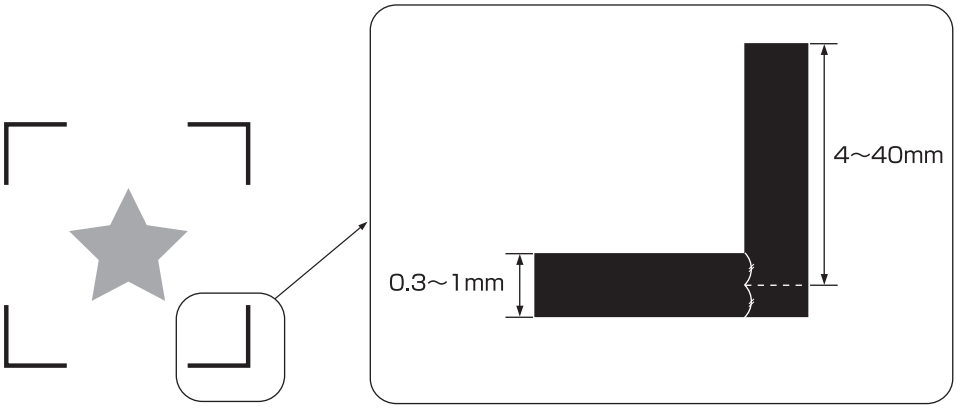

Mark and printable, cuttable range

The TP1 starting line should be 20mm or more away from the sheet line.
When feeding out, certain types of sheet may get stuck.
The TP2 end line should be 30mm or more outside the sheet end line.
When feeding out, separation from the grit rollers may occur.

Mark Form : Type1

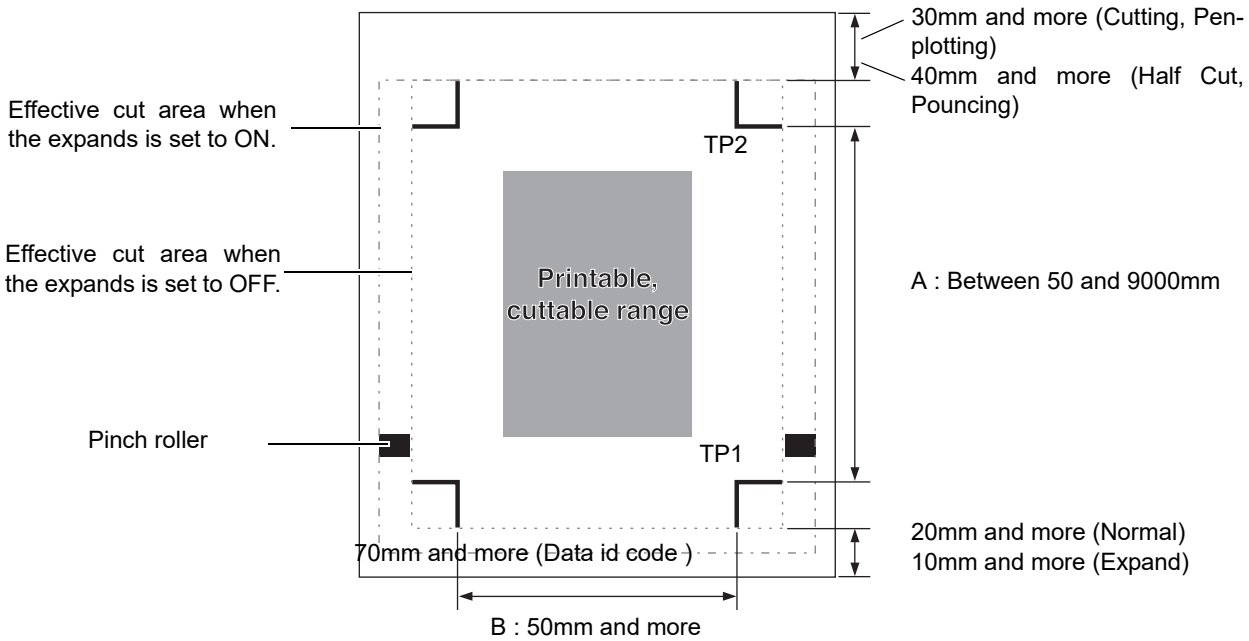

70mm and more (When using Data ID Code P. 3-42)

Mark Form : Type2

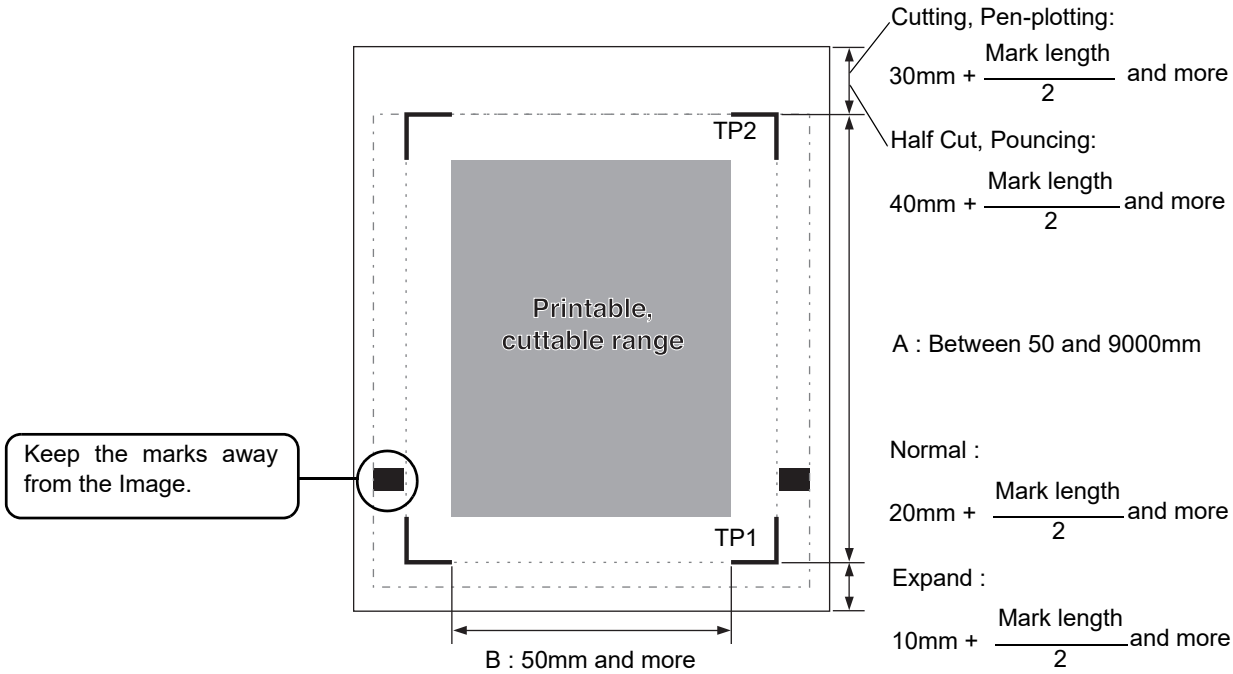

70mm and more (When using Data ID Code P. 3-42)

No plotting area around the registration marks

Around the registration marks (from the mark origin to the mark size area), there should be no data or stains, which can lead to incorrect detection of the origin or marks.

Important! * When the mark origin gets detected incorrectly, the cutting area will be altered.

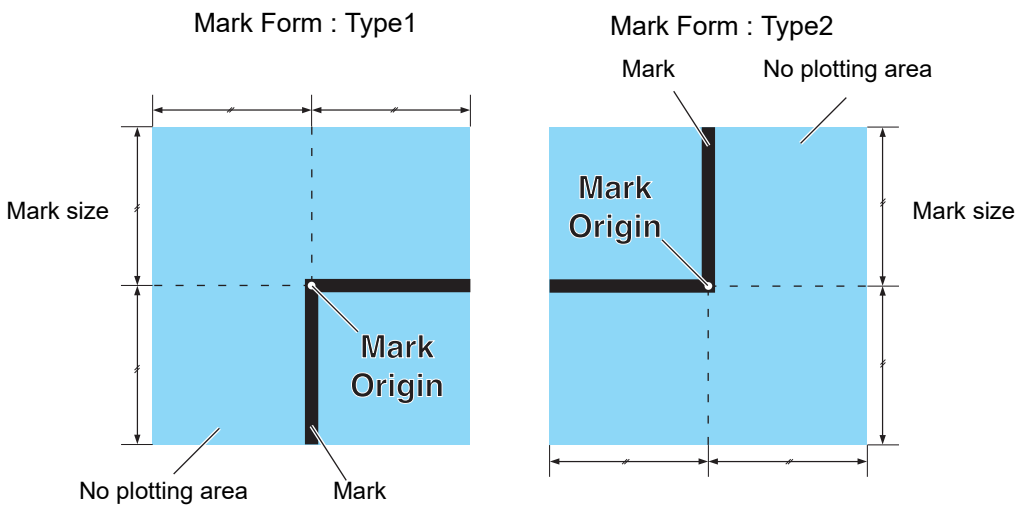

Example of incorrect detection 1 : The plot is outside the registration marks

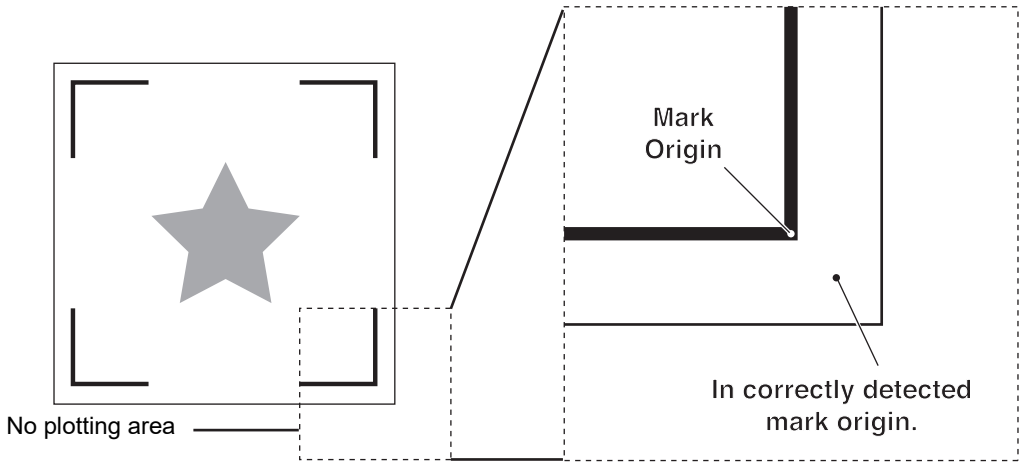

Example of incorrect detection 2 : The distance between registration marks(TP2&TP1, TP4&TP2) is smaller than the mark length (for TYPE2)

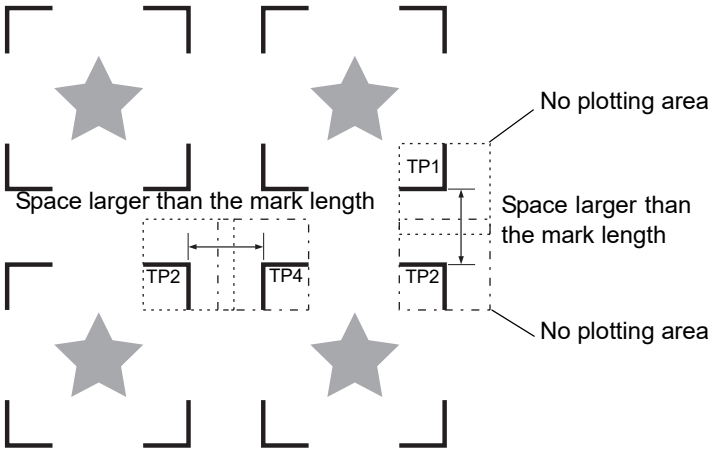

The size of, and the distance between, registration marks

The size of the registration mark in accordance with the distance between marks is as follows. When the size is too small, the marks will not be detected correctly.

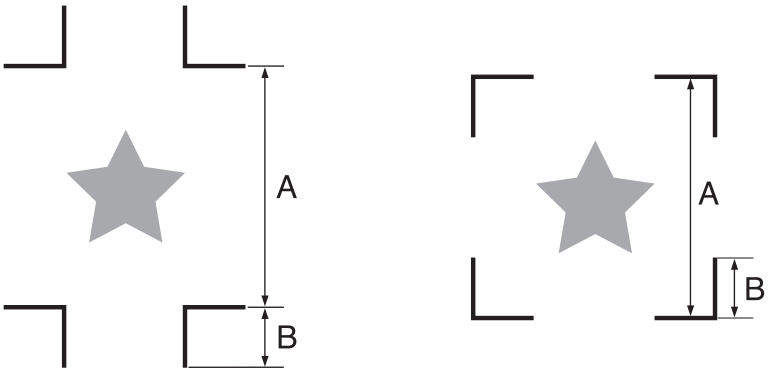

A	200 max.	500 max.	1000 max.	2000 max.	2001 max.
B	4 min.	8 min.	15 min.	25 min.	35 to 40

(mm)

The distance between TP2 and TP1

The distance between registration marks(blank space) should be somewhere between the mark length and 1000mm.

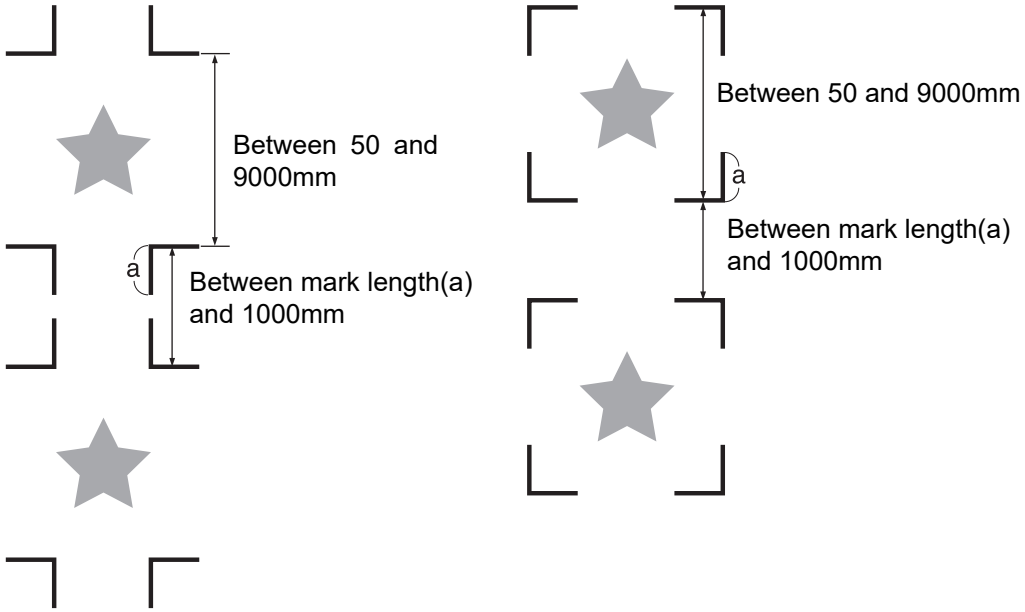

The size of the marks including all four sides

When in use of a wider (800mm, or wider) sheet, set in 210mm x 297mm to 297mm x 420mm size including four sides of the registration marks. It enables to the wasteful margins to place efficiently the image. *1

*1 : Depends on the size of the image, restrictions above may not be applied.

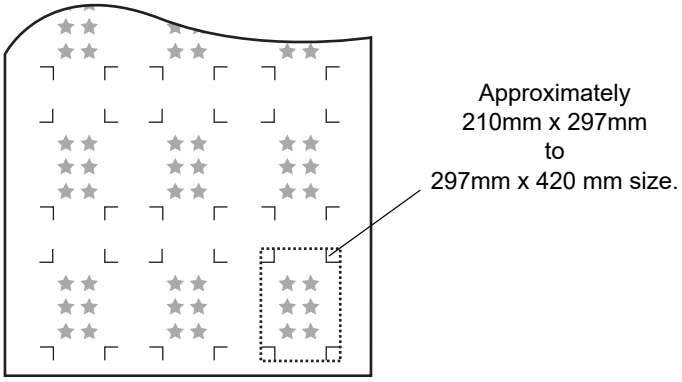

In case of perform printing a registration mark continuously

When perform printing a registration mark continuously, set the one side of the registration mark size to 8mm. In case 8mm or shorter registration mark recognized continuously, may cause the glitches on the main unit.

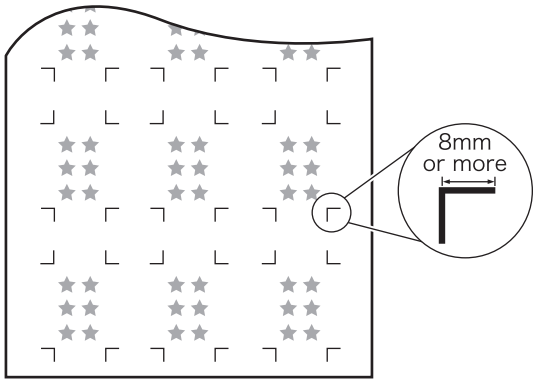

Color of mark

The mark shall be printed in black against the white background.
The registration mark won't be detected correctly when the background color is anything other than white, or the mark color is anything other than black.

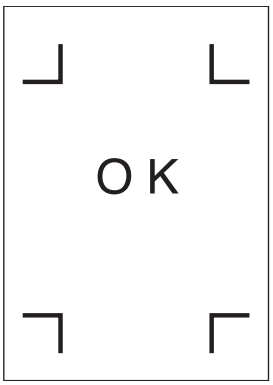

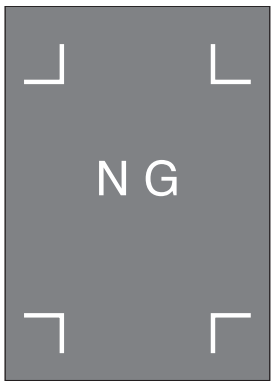

Mark jagged

When the mark is jagged, the mark origin will be detected incorrectly, and that may lead to cutting distortion.

Notes on mark detection

Important!

* To make the distance between registration marks equal to the cutting length, input the distance between printed marks found by the mark detecting function. In this case, scale correction between the registration marks is prior to distance correction in the function.
  If changes the distance correction value, the scale correction between the registration marks will be invalid.
* Clear the origin position, sheet slope correction, and the scale correction o f the registration marks by turning over the clamp lever toward you.
* Once the device detects marks, the origin will be established at the location of TP1. If you establish another origin at a different location using the jog key (arrow key), the origin will be rendered effective.
* The rotating function is rendered ineffective.

Operation settings for detection of marks

The settings of the following nine functions are specified when detecting a mark.

MARK DETECT : Cutting accuracy will increase when there are more detection points.
Set to “1pt” when using FineCut.

Setting	Description
OFF	This setting is specified with cutting a normal sheet instead of the contour of a pattern.
1pt	Detect the TP1. Perform only the origin point setting.
2ptA	Detect the two registration marks, TP1 and TP2. Perform the slope correction and the scale correction of the sheet feeding direction.
2ptB	Detect the two registration marks, TP1 and TP3. Perform the slope correction and the scale correction of the width direction.
3pt	Detect the three registration marks, TP1, TP2 and TP3. Perform the slope correction and the scale correction of the sheet feeding and the width direction.
4pt	Detect the three registration marks, TP1, TP2, TP3 and TP4. Perform the slope correction and the scale corrections, and the trapezium correction.

PAPER HOLD : Set to “ON” normally.

Setting	Description
ON	The sheet clamps mounted on the carriage hole the sheet to facilitate the mark detection.
OFF	The sheet clamps are not used for the mark detection. Set to OFF when in use of the thin sheet, or prevent from scratching on the sheet. (If the sheet clamps are not used, the clamp detection may fail.)

DIST.REVI. : Set to “OFF” when using FineCut.

Setting	Description
OFF	The device will not conduct the distance compensation.
BEFOR	Enter the scale correction values and the trapezium correction*1 value before executing the registration mark detection. (☞P. 3-21, ☞P. 3-26) Since the distance between registration marks is pre-set, rapid movement is expected when detecting. It is suitable when the distance is long.
AFTER	Enter the scale correction values and the trapezium correction*1 value after executing the registration mark detection. (☞P. 3-39, ☞P. 3-25) Since there is an understanding of the distance between marks, set-value inputting will be done rapidly. The AFTER setting will take less time than the BEFORE setting.

*1 : Diameter difference between the right and the left grit rollers may cause the sheet shirting distance difference between the both sheets. The trapezium correction compensates the errors.

Size :

Setting	Description
4-40mm	Setting the detection offset of the registration marks. In case the printed mark's horizontal and vertical lengths differ, set the value to the shorter length. Vertical lengths

OffsetA, OffsetB :

Setting	Description
±40.00mm	Generally the origin will set the following position. However, the position of the origin may differ depending on the application software. In this case, it can be corrected. Mark: TYPE1 Mark: TYPE2 When the origin becomes out of the effective cutting area, "ERR37 MARK ORG" will be appeared on the display. In the cause, please write the position of registration marks on the seat on a center side of the seat.

MARK FORM

Setting	Description
TYPE1 ╬ TYPE2 ⛶	Select either one of the following types of the registration mark. Mark: TYPE1 Mark: TYPE2 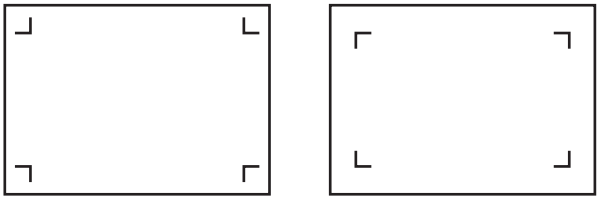

COPIES A(↑), COPIES B(←) :

Setting	Description
1 to 9999	Effective when one pattern is multi-printed at regular intervals. Cut automatically as detecting the registration marks continuously based on the first data. 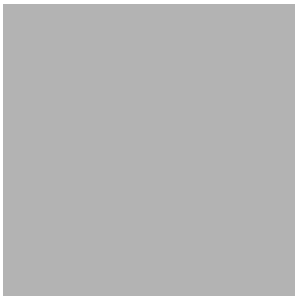 3x3 copy When in use of a leaf sheet, the copy numbers refers to the [COPIES A] value. If the number of copies can specify on the application software, like an attached FineCut, specify the value to [1]

SPD LIMIT :

Setting	Description
0 to 60cm/s	Set the speed limit when rapidly moving in performing continuous copy. Depends on the sheet type in use, mark detect may not be performed correctly if using a slippery sheet. In the case, set the speed limit. If not setting the speed limit, set the value to “0”.

SKEW CHECK :

Setting	Description
0 ～ 99mm	Set the range of the sheet feeding error when performing continuous copy. In case performing continuous copy on roll sheet, it may be misaligned by degrees for the sheet direction. In case the TP1 mark misaligned over the range, cutting performance is temporally stopped. Push on the [ENTER] key after altering the sheet feeding error. Push on the [ENTER] key after moving the light pointer to the position as the pictures below for restarting the mark detect. In case not detecting the marks, set the value to “0”. 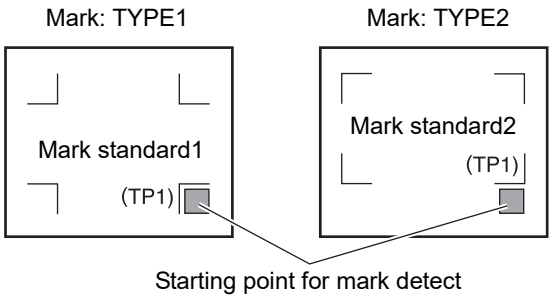

DETECT MODE :

Setting	Description
FAST	The position is determined by scanning the registration mark segment back and forth once. Time required for detection is short, however, the accuracy becomes lower a little.
PREC	After scanning the registration mark segment back and forth once, measures the position without fail by scanning the segment included its outside again. Time required for detection becomes slightly longer.

MARK ERR STOP :

Setting	Description
1 to 5	When a mark detect error is generated during continuous copying on a roll sheet, error data in information on the current status of the length and width for the register mark or the data size and so on is skipped, and copy cutting continues. In this case, set how many times a mark detect failure can occur in succession before copying is stopped. When set to 1, copying stops when the first mark detect error occurs. Since the jog keys allow you to perform step feeding, it is possible to perform mark detect for error data again. If it is not detected even after trying again, cancel the operation with the [END] key.

Data ID Code

Setting	Description
OFF	Disable ID detection.
ON	Enable ID detection. After detecting the registration mark, the data ID can be detected and cutting can be performed automatically.

Method to detect registration marks

Registration marks are detected in two different ways; full-automatic detection and semi-automatic detection. Use the semi-automatic function when no TP1 is at the bottom right of the sheet, or using FineCut attached to cutting software.

Important!

* If the sheet is curling up, straighten the sheet.
* Use a sheet which has neither stains nor images in the area (A) located between TP1 and TP2 and in the area (B) located between TP1 and TP3.

Confirm sheet slope by a light pointer

Pull clamp lever down and the pinch rollers upholds to light the light pointer. The carriage is manually moved from side to side.

Pull clamp lever down, and manually move the carriage between TP and TP3 to confirm the sheet slope with a line of the light pointer. Adjust the sheet slope according to the line.

Important!

* In case no action performed for five minutes after pulling clamp lever down, the light pointer will automatically go out.

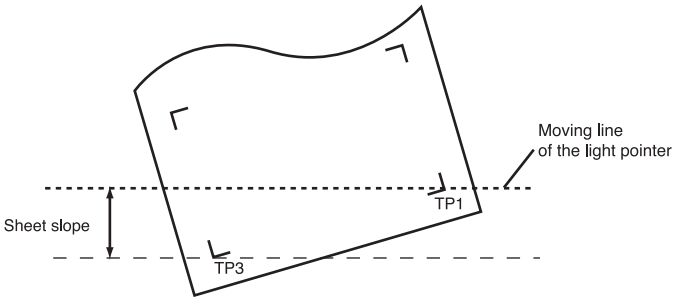

Full-automatic detection of marks

It enables to compensate the difference in length of the registration marks between printed length and detected length (A and B). For this purpose, measure the length A and B beforehand.
Measure the length between the registration marks.

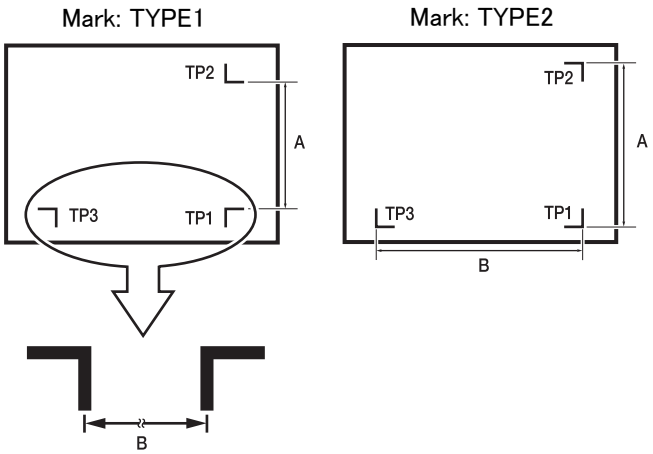

Detect procedure ([DIST.REVI.] Setting value is "BEFOR")

1. Measure lengths A and B contained in the data to be output.

2. Place TP1 at a location as illustrated on the left.

   Cutting line depends on the tool in use.

   - In the case where the “PEN” or “CUT” is specified in the tool conditions: To the pen line rubber side.
   - In the case where the “PIN” or “HALF” is specified in the tool conditions: To the pen line sponge side.

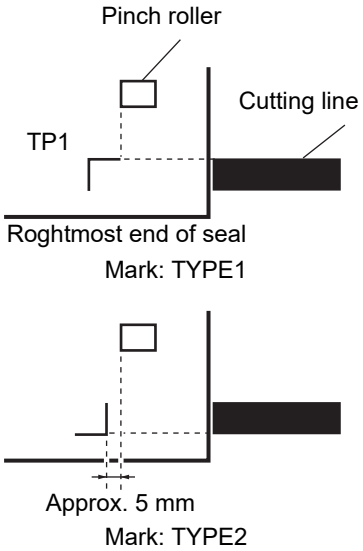

Hint!
- If it is impossible to place the registration TP1 at the location given in the sketch, proceed to the section describing “Semi-automatic registra-tion mark detection”.

3. Taking care not to allow the sheet to slip out of position, turn the clamp lever toward you.

   Then, the pinch rollers will retain the sheet.

4. Press the [ENTER / HOLD] key.

ENTER/HOLD

ROLL < R > LEAF

⇩

A(1-2) =**.*mm**

Hint!
- In case [ROLL. SELECT] is set [ON], select the number of pinch roller to use. (☞P. 3-52)

scale correction display appears after detecting only the sheet width.(The right sample shows the 4 points detection display.)

5. Set the value with the jog keys [▲] [▼].

   Push on the [ENTER/HOLD] key to the following scale correction setting.

A(1-2) =**.*mm**

⇩

B(1-3) =**.*mm**

Hint!
- If [MARK DETECT] its set to [2ptA], the display to enter the B length will not appear.
- If [MARK DETECT] is set to [1pt], the scale correction setting display will not appear but the origin point.

6. Push on the [ENTER/HOLD] key after completing the settings.

   Start the registration mark detection.

   If any of the marks cannot be detected, the message shown on the below will appear on the LCD. In this case, set the sheet properly.

ENTER/HOLD

B(1-3) =**.*mm**

⇩

**** MARK DETECT ****

ERROR36 MARKdetect

Hint!
- For details on numbers of the detected registration marks, refer to the P. 3-30.

Important!
* Sheet set should set to rear.

7. Set the origin.

After detecting the registration marks, the appropriate cutting area will be displayed, then local mode will return.

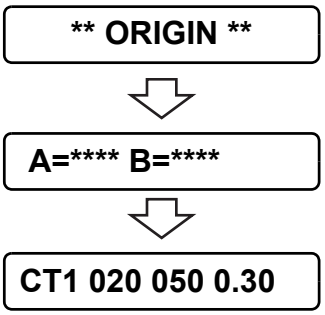

Detect procedure ([DIST.REVI.] Setting value is "AFTER")

1. Perform the procedure "Detect procedure ([DIST.REVI.] Setting value is "BEFOR")" of step1 to step3. (☞P. 3-35)

2. Press the [ENTER / HOLD] key.

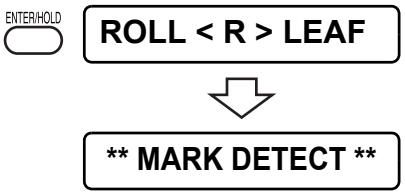

Hint!
- In case [ROLL. SELECT] is set [ON], select the number of pinch roller to use. (☞P. 2-16)

Start the registration mark detection after detecting only the sheet width.

If any of the marks cannot be detected, the message shown on the below will appear on the LCD. In this case, set the sheet properly.

ERROR36 MARKdetect

Hint!
- For details on numbers of the detected registration marks, refer to the P. 3-30.

Important!
- * Sheet set should set to rear.

3. Sheet set should set to rear.After detecting the registration marks, the scale correction display appears. (The right sample shows the 4 points detection display.)

In case the actual measured value and the detected lengths differ, set the value with the jog keys [▲] [▼].

Push on the [ENTER/HOLD] key to the following scale correction setting.

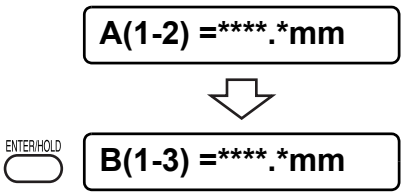

Hint!
- If [DIST. REVI.] is set to [OFF], the display will not appear.
- If [MARK DETECT] its set to [2ptA], the display to enter the B length will not appear.
- If [MARK DETECT] is set to [1pt], the scale correction setting display will not appear but the origin point.

4. Push on the [ENTER/HOLD] key after completing the settings.

   Set the origin.

   After detecting the registration marks, the appropriate cutting area will be displayed, then local mode will return.

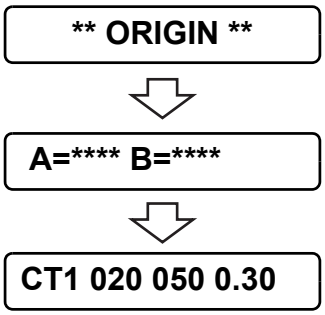

Semi-automatic registration marks detection

In case TP1 cannot locate to the registration mark detection position by the full automatic, detect marks under the semi-automatic mode.

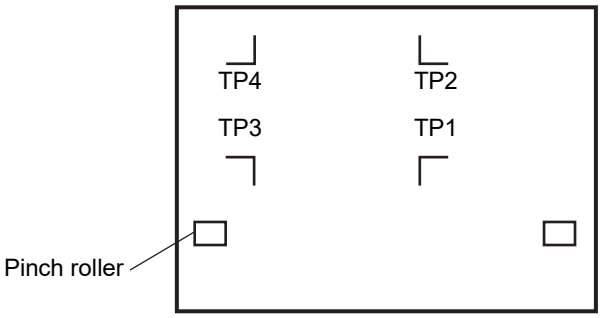

Detect procedure ([DIST.REVI.] Setting value is "BEFOR")

1. Place the sheet on the device and turn the clamp lever toward you.

   Then, the pinch rollers will retain the sheet and the device will perform the sheet detection.

2. Perform the sheet detection by pushing on the jog keys [◀] [▶]. (When the sheet is set to the rear position.)

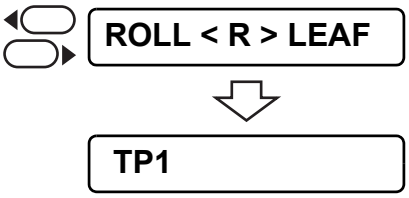

Hint!

- In case [ROLL. SELECT] is set [ON], select the number of pinch roller to use. (☞P. 2-20)

When detects the sheet, the display shows the registration mark detection wait.

Important!

* We strongly recommend the rear set for the front set is functionally limited.

Hint!

- When the sheet position is set to front, the view position of the TP1 - TP4 will turn as follows.

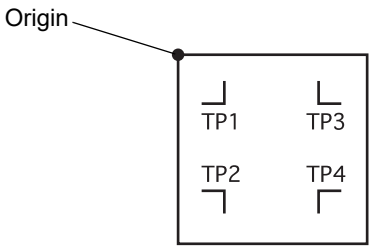

3. Move the Light Pointer within the area shown below by pushing on the jog keys [▲] [▼] [◀] and [▶].

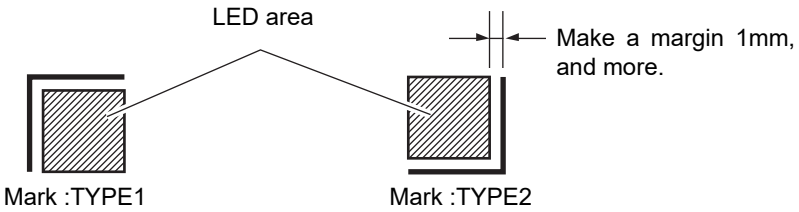

4. Press the [ENTER/HOLD] key.

Scale correction display appears. (The right sample shows the 4 points detection display.)

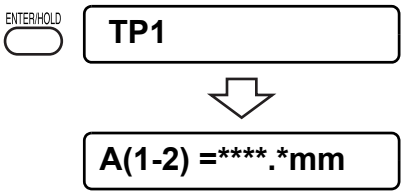

5. In case the actual measured value and the detected lengths differ, set the value with the jog keys [▲] [▼].

Push on the [ENTER/HOLD] key to the following scale correction setting.

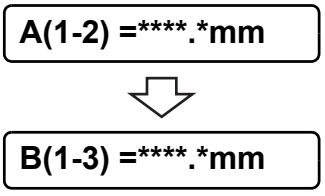

Hint!

- If [DIST. REVI.] is set to [OFF], the display will not appear.
- If [MARK DETECT] its set to [2ptA], the display to enter the B length will not appear.
- If [MARK DETECT] is set to [1pt], the scale correction setting display will not appear but the origin point.

6. Push on the [ENTER/HOLD] key after completing the settings.

   Start detecting the registration marks according to the setting on [MARK DETECT].

   Hint!
   - Refer to the Operation settings for detection of marks. (☞P. 3-30)

   If any of the marks cannot be detected, the message shown on the left will appear on the LCD. In this case, set the sheet properly.

   ERROR36 MARKdetect

ENTER/HOLD

B(1-3) =**.*mm**

⇩

**** ﾄﾝﾎﾞ ｹﾝｼｭﾂ ****

7. Set the origin.

   After detecting the registration marks, the appropriate cutting area will be displayed, then local mode will return.

ENTER/HOLD

**** ORIGIN ****

⇩

A=** B=****

⇩

CT1 020 050 0.30

Detect procedure ([DIST.REVI.] Setting value is "AFTER")

1. Perform the procedure "Detect procedure ([DIST.REVI.] Setting value is "BEFOR")" of step1 to step3. (☞P. 3-35)

2. Press the [ENTER/HOLD] key.

   Start detecting the registration marks according to the setting on [MARK DETECT].

   Hint!
   - Refer to the Operation settings for detection of marks. (☞P. 3-30)

   Start the registration mark detection after detecting only the sheet width.

   If any of the marks cannot be detected, the message shown on the below will appear on the LCD. In this case, set the sheet properly.

   ERROR36 MARKdetect

ENTER/HOLD

ROLL < R > LEAF

⇩

**** MARK DETECT ****

3. After detecting the registration marks, the scale correction display appears. (The right sample shows the 4 points detection display.)

   In case the actual measured value and the detected lengths differ, set the value with the jog keys [▲] [▼].

   Push on the [ENTER/HOLD] key to the following scale correction setting.

A(1-2) =**.*mm**

⇩

B(1-3) =**.*mm**

⇩

ENTER/HOLD

A(3-4) =**.*mm**

Hint!

- If [DIST. REVI.] is set to [OFF], the display will not appear.
- If [MARK DETECT] its set to [2ptA], the display to enter the B length will not appear.
- If [MARK DETECT] is set to [1pt], the scale correction setting display will not appear but the origin point.

4. Push on the [ENTER/HOLD] key after completing the settings.

   Set the origin.

   After detecting the registration marks, the appropriate cutting area will be displayed, then local mode will return.

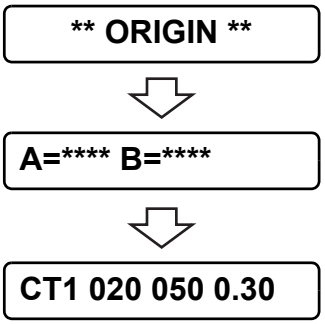

How to release the registration mark detection setting

If (TP1) is displayed by detecting the sheet without registration marks, set the registration mark detection setting to [OFF].

Procedure

1. Push on the [END] key to release the registration mark detection mode.

   Return to the local mode after displaying the available cutting area.

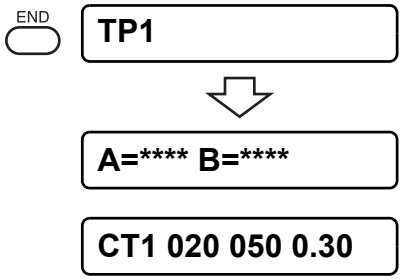

2. Push on the [FUNCTION] key.

   Enter the function mode.

3. Select [SET UP] by pushing on the jog keys [▲] [▼].

4. Push on the [ENTER] key.

5. Select [MARK DETECT] by pushing on the jog keys [▲] [▼].

6. Push on the [ENTER] key.

7. Select [OFF] by pushing on the jog keys [▲] [▼].

MARK DETECT :OFF

8. Push on the [ENTER] key.
   Return to the [MARK DETECT] setting.

MARK DETECT <ent>

9. Push on the [END] key twice.
   Return to the local mode.

CT1 020 050 0.30

Link cut and print (ID cut) (Applicable models: Plus series)

You can send cut data automatically from the computer by adding data ID code to the register mark.
Please also refer to the operation manual of "FineCut 8 or RasterLink" for how to attach the data ID code.
You can print & cut (ID cut) at once by linking with RasterLink 6 Plus.
For details, refer to "ID cut guide"

ID cut

1. Changing settings for reading data ID code.
   - Change the following setting of "Mark detection".

	Setting item	Setting parameter	Setting value	Remarks
1	Read data ID (P. 3-33)	Data ID code	ON	Enable reading of data ID.
2	Number of mark detection (P. 3-30)	Mark detection	1 point	To detect only the origin register mark, you will make one detection. Even if it is set to a point other than 1 point, only one point will be detected.
3	Register mark size (P. 3-31)	Size	Any	Adjust to the printed registered mark.
4	Register mark shape (P. 3-32)	Shape	Any	Adjust to the printed registered mark.
5	Mode after startup (P. 3-63)	Startup mode	Remote	After data ID detection, it becomes automatically remote.
6	Automatic registration mark search (P. 3-63)	SEARCH MARK	ON	After cutting, the next mark is automatically detected.

2. Set the Sheet.
3. Detect register marks. (P. 3-24)
   - When detection of register mark ends, read the data ID code.
   - If ID reading fails, an error is displayed and processing is interrupted.

Important!

* Because IDs may be misrecognized, be sure to match the setting to the printed register mark size.

4. After reading the data ID code, shift to remote mode.
   - Automatically send cutting data from the computer.
   - Please be aware that cutting will start automatically.
5. After cutting, find the next register mark.
   - Detection time is affected by the specified width and range.

Hint!

- When using data ID, the size of data to be cut (distance between register marks) must be about 70 mm or more.
- When the data ID code setting is ON, please do not set mark registration detection setting to OFF.

Expand the cut (plot) area [EXPANDS]

Expand is the function enables to expand the cut (plot) area.
Reduce the dead space to expand the cut (plot) area.
Reduce the both right and left dead space at 10mm.
When setting a sheet to the rear, the forward dead space reduced at 10mm.
When setting a sheet to the front, the back-end dead space reduced at 10mm.

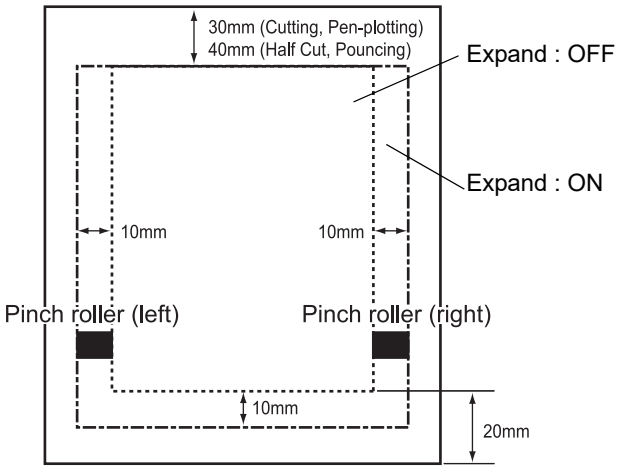

When a sheet is set to the rear

Important!

* In case too strong pressure to the sheet, may cause the paper jam when the Expand mode is set to ON.
* In case no axis alignment setting, the blade tip protrudes from a sheet may cause the paper jam. The protruded blade tip may damage itself or the plotter.
* In case feeding the cut sheet with the pinch roller, inferior cutting quality.
* In case the pinch roller moves on the registration marks during detecting, the registration marks may not detect precisely.
* When setting the Expand after detecting the sheet, retry the sheet detection.

Switch the cutting mode [CUT MODE]

This function is used to specify the cutting quality.

Setting value:

QUALITY : The device conducts cutting giving priority to the cutting quality.
NORMAL : The device conducts cutting normally.
HIGHspd : The device conducts cutting quickly.

Hint!

- Select the “QUALITY” in the following cases:
  - Where a character of which size is 10 mm or less is to be cut
  - bWhere a picture pattern or character that have many sharp curves is to be cut
  - Where minute cutting is to be performed
- It should be noted, however, that a pattern with a rugged edges may be finished in the case where the data sent from the host computer is excessively minute. It is recommended in such a case to select the “HIGHspd” for smoother finish.

Set the function according to the blade tip direction [DUMMY CUT]

With this function, the device operates in such a way as to orient the blade tip to a predetermined direction when starting cutting. Execute dummy cut when you have taken the following procedure.

- When selecting a tool (CT1, CT2, CT3, CT4, CT5 or HLF)
- When establishing cutting conditions

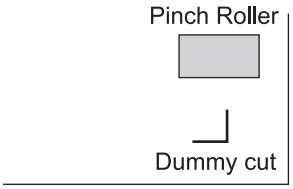

Execute dummy cut this side of the pinch roller that is located near either end of the sheet as observed from the current location of the carriage.
Set the dummy cut function to OFF if you want to protect the sheet when plotting a cut-out character.

Setting value:

ON, OFF

Important!

* The initial setting of the dummy cut function is ON.
If you have set the dummy cut function to OFF, execute test cutting to adjust the blade-tip direction in prior to cutting. (☞P. 3-13)

Specify the sheet type [SHEET SET]

In the case where a heavy sheet or wide sheet is to be used, the sheet setting is performed using the sheet setting function to avoid displacement of the sheet
In the case where the [SHEET SET] is set to [HEAVY], the maximum speed that can be specified will be 20 cm/s and the acceleration will be a half of the normal value.

Setting value:

NORMAL · HEAVY

Important!

* Do not cut (plot) a heavier or wider sheet at high speed, or the sheet may displace.
Too heavy or wide sheet may result in the [ERR41 MOTOR B] error.
In this case, set the sheet setting to [HEAVY].

Set the offset value of the automatic feeding function [FEED OFFSET]

Set the offset value to feed with a little extra.
When performing the auto feeding function, a paper tube may move loudly in case of the roll sheet comes up to the wire. Feed the roll sheet with a little extra to keep staying on a roll bar.

Setting value:

0 to 100cm

Cut off the sheet automatically after completing cutting operation [AUTO. CUT]

Perform the sheet cut automatically after completing cutting operation/
The automatic sheet cut function is effective when a roll sheet is selected (☞P. 2-17).

Important!

* When pinch roller 1 and pinch roller 3 are set to maximum width, auto cut range is as follows.
40 mm from the inside of the pinch roller 1
80 mm from the inside of the pinch roller 3

- Cut timing:
  When in use of a roll sheet, perform the cut off operation automatically after completing the first data cutting.
  When performing [No.COPIES], or copying the registration marks continuously, the first line is cut off after completing the second line cutting.

- Cut position: No registration mark detected
  Perform the cut off operation away from the data by the [CUT MARGIN].

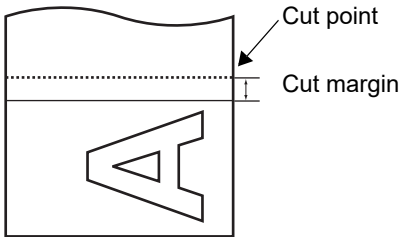

- Cut position: When registration mark detected
  Perform the cut off operation away from the B direction of TP2 registration mark by the [CUT MARGIN].

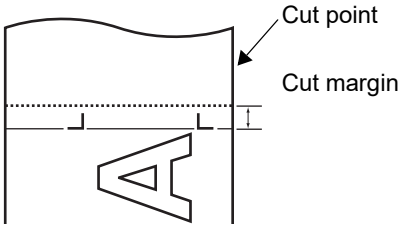

- In case detected the distance from the TP2 and the TP1 registration mark during copying the registration mark continuously, cut off the sheet in between TP1 and TP2.

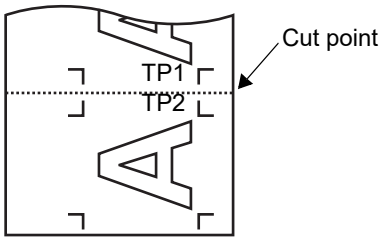

Important!

* When copying the registration mark continuously, it will happen to cut both side of the edge automatically as follow,

- it is narrower value of cutting point than setting value of Mark detection
- Paper scale is over more than normal. (prevend from cutting plots with marks)

Hint!

- The device will cut the sheet of paper, in the case where any of the following conditions is satisfied.
  When receiving a command to shift to the local mode.
  he location at which the auto-cut is performed: The location found by adding 25 mm to the maximum cutting position in A-axis.
- When receiving a command to switch the pages. When the device does not receive any command for ten seconds or more after the completion of cutting (plotting).
  The location at which the auto-cut is performed: The top of the next page.

Setting value:

AUTO CUT : ON, OFF
CUT MARGIN : 0 to 50 mm
CUT TYPE : 3 STEP, 2 STEP
OVERLAP : 0 to 50 mm
SHEET FEED : ON, OFF
AT MARK Err : ON, OFF
ACut Vibrate : ON, OFF

Hint!

- Cutting methods
  In case of selecting three steps cutting, the center part is cut after cutting the both left and right sides.

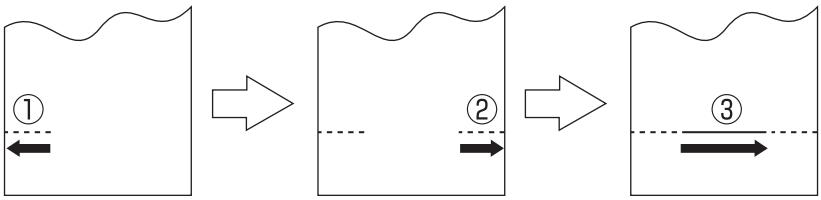

For the two steps cutting, the right part is cut off after cutting 10 cm of the left side.

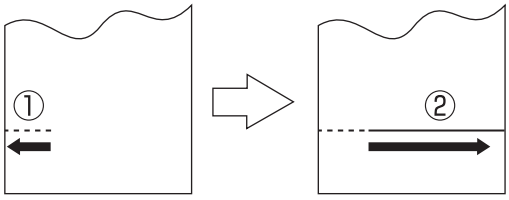

Important!

* When performing the three steps cutting, the cut part may be roughly and some paper chips may be generated.
* When performing the two steps cutting for a wider or heavier sheet, the correct cutting may not be performed for the heavy sheet weight.
  Select an appropriate cutting method in accordance with a sheet in use.

OVERLAP

Able to specify the width to be cut overlapped with 0 to 50mm range.
The overlap cut position is as follows,
For 3 step cut, between first and third step, or second and third step.
For 2 step cut, between first and second step.

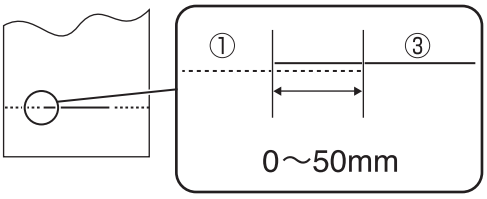

Important!

* If mark skipping occurs during mark detection copying, set "MARK ID Err" to OFF so that the skipped line is not cut.

Sheet Feed Settings

Set to OFF to disable the sheet ejection or pull-back motion between cutting operation steps.
Chips and steps are less likely to occur, but depending on the type of sheet, the cutter may collide with the raised sheet when it returns from outside the sheet to inside the sheet.

The Sheet Feed function is used to reliably eject the cut sheet toward the front of the machine and perform leading edge detection.
If Sheet Feed is disabled, small print data may not provide sufficient sheet movement to eject the cut sheet to the front of the machine. As a result, leading edge detection may not be performed correctly.If this occurs, enable the Sheet Feed setting.

ACut Vibrate Settings

When set to ON, after the cutting cutter is lowered, a minute movement in the sheet width direction is performed to ensure that the cutter blade bites into the sheet.
This reduces the occurrence of shavings and bumps.
Since it depends on the type of sheet, please use this setting in combination with other settings such as overlapping cut to set the optimum cutting conditions.

Divide a large data before cutting [DIVISION CUT]

In the case where the data on cutting exceeds the sheet width, the device is able to cut the data with divided appropriately. While the device is engaged in division cut, it will ignore other data sent from the host computer. In the case where the rotating function is set to the ON state, the result will be as illustrated below.

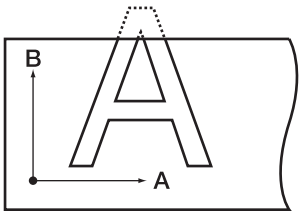

Ritating function: OFF

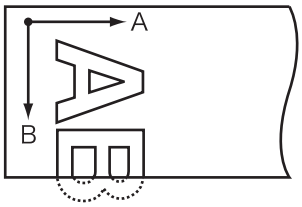

Ritating function: ON

In the case of the frame cutting or adhesion allowance marking, the device will perform cutting based on the size of data on cutting. If the host computer designates the frame cutting and sends data to the device, the frame will align with the adhesion allowance marks to facilitate adhesion.

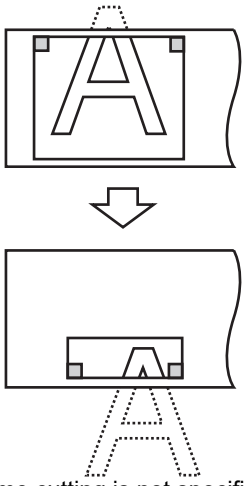

Frame cutting is not specified on thehost computer side.

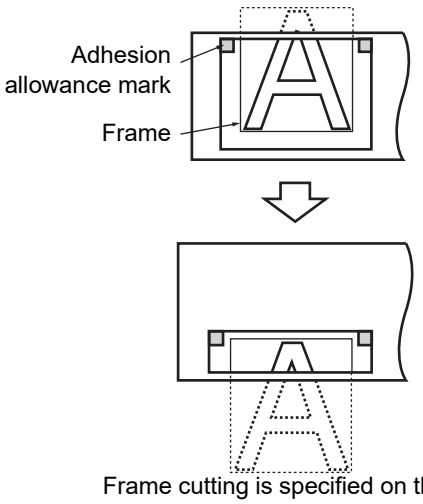

Frame cutting is specified on the host computer side.

Important!

* The sheet has an adhesion allowance of 1 cm. It is, therefore, necessary that the effective cutting area shall be wider than 1 cm at all times.

Important!

* In any of the following case, the device will cut neither the frame nor the adhesion allowance marks.

- Where the capacity of data is larger than the receiver buffer capacity
- Where the origin updating command is contained in the data on cutting
- Where the two-point correcting function is specified
- Where the width of effective cutting area is 1 cm or less
- Where the device cuts the test data stored in it

- The following display will appear on the LCD panel.

****END DIVISION****

Setting value:

DIVISION CUT	:	ON, OFF
FRAME CUT	:	ON, OFF
MARK CUT	:	ON, OFF

Procedure:

1. Set the [DIVISIONcut] to the ON state.

2. Send data from the host computer to the device.

   If the data exceeds the cutting area, the display given on the left will appear on the LCD.

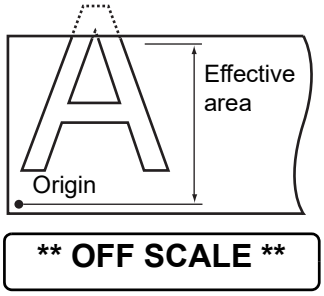

3. Upon completion of cutting, wait until the device cuts the frame and adhesion allowance mark.

   Remaining time until the completion of cutting the frame and mark.

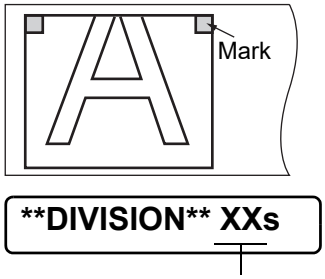

The time required to cut the frame and adhesion allowance mark will appear on the LCD panel.

4. Upon completion of the frame cutting, the device will enter the local mode.

   The display shown on the left will appear on the LCD panel.

CUT1 DIVISION

Important!

* Do not raise the clamp lever while the LCD panel gives the aforementioned display. If you raise the clamp lever, the machine will terminate cutting.

5. Establish a new origin.

   Move on the sheet using the jog key (arrow key) to establish an origin.

   If the sheet has no space for cutting, replace the sheet with a new one.

6. Press the [REMOTE] key to set the device in the remote mode.

   Feed the sheet by the maximum sheet length required by data on cutting and start cutting.

   If the sheet is not fed or the sheet is not sufficiently long, replace the sheet with a larger one in the aforementioned step 5).

7. Carry out steps 5 and 6 in repetition.

Repeat those steps continuously until there is no data that exceeds the sheet width. Upon completion of those steps, the LCD display will give the tool conditions.

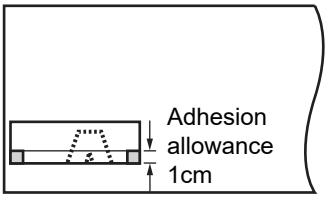

CT1 020 050 0.30

Perform cutting with a dotted line [HALF CUT]

When cutting the sheet according to data, the device cuts the data in broken lines without cutting it out.
In addition, the “auto cut” can be specified to cut out the sheet automatical y upon completion cutting. To conduct the broken-line cutting, place the tool on this side of the tool holder and set the cutting conditions to “HALF.”

Important!

* For the broken-line cutting, use the cutter (model: SPB-0001, a set of three cemented carbide blades) that is optionally available.
* In case performing dot-line cutting on the pen line rubber, the blade tip may be damaged.
* Since the broken-line cutting cuts the media together with the base paper, the life of the cutter blade used for broken-line cutting will be shorter than that of the one used for normal cutting.

Setting value:

Half cut (Setting of broken-line cutting) :	ON, OFF
Half cut press (Cutting pressure of sheet to remain after cutting) :	0 g to 80
Half cut length (Length of sheet to remain after cutting) :	0.1 mm to 5.0 mm
Cut length (Length by which the sheet is cut out.) :	5 to 150 mm

Hint!

- Reference value
  Cutting conditions and broken-line cutting conditions for the case where the sheet that weighs 65 kg is cut are as follows:

<Cutting conditions>		<Broken-line cutting conditions>	
• SPEED	40 cm/s	• Half cut press	0 g
• PRESSURE	40 g	• Half cut length	0.5 mm
• OFFSET	0.30 mm	• Cut length	10 mm

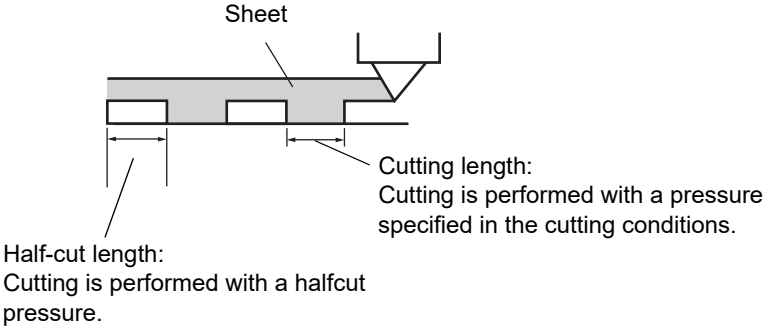

Perform plotting with a perforated line [POUNCING]

Pouncing is a perforated pattern.
The pattern is as described below;

Hint!

- Mark the perforated sheet with the marker or spray. It is useful for positioning of the signboard, formation of a construction, etc.

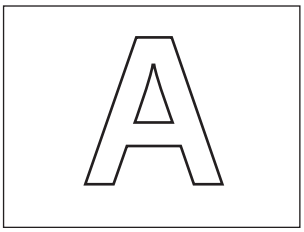

Standard cutting

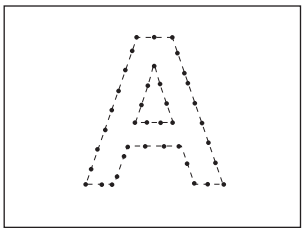

Pouncing

Use the tool of an optional pouncing pin whose cutting edge is needle-shaped.
Set the tool in front of the tool holder and drill on the pen line sponge.
Set the cut condition to [PIN].
Use paper instead of vinyl chloride sheet.

Setting value:

OFF：The pouncing function is rendered ineffective.
ON ：The pouncing function is rendered effective.

Setting of the pouncing conditions (☞P. 2-11)

SPEED ：1 to 10cm/s(1cm/s step)
15, 20, 25, 30, 35, 40, 50, 60, 70, 80, 90, 100cm/s
PRESSURE：10 ～ 400(g)
Dot interval：1 ～ 100 (mm)

Switch the origin point [ORGN SELECT]

Set the command origin point according to the command specifications of the application software.
This setting is effective in use of the MGL-II c command. When the MGL- I c1 command in use, the“LOWER right ORIGIN” is set.

Setting value:

CENTER ORIGIN : Center of the available cutting area
LOWER right ORIGIN : Lower right of the available cutting area (Lower right origin of the AB coordinate.)

Hint!

- Set the command origin point to the [LOWERrightORIGIN] to expand the cutting area up to 51m.
- The cut area is set to 3m if the command origin is set to [CENTER ORIGIN].

Important!

* When the ROTATION function id ON, Origin is as follows.

Rotation :OFF

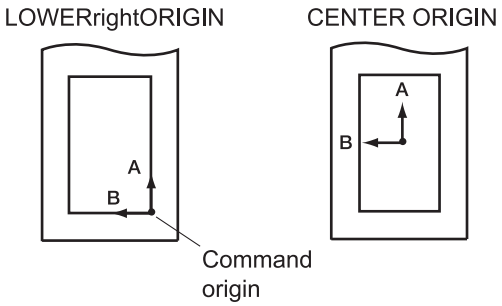

Rotation :ON

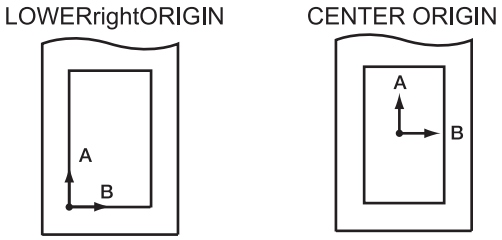

RotationSwitch the cut (plot) moving direction [ROTATION]

This function is used to specify the location of origin and direction of the axis of coordinates according to the application software to be used.

Setting value:

ON ：The device rotates the coordinate axis and relocates the origin at a time.
OFF：The device does not perform rotation of the coordinate axis.

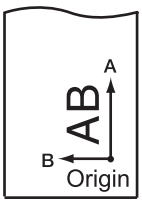

Rotating function: OFF

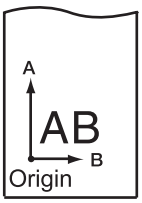

Rotating function: ON

After the sheet detection, the carriage will stop at the origin.

Axis of coordinates

The device has four different axis of coordinates according to how the sheet loading direction and the angle of rotation of the coordinate axis determined by the rotating function are combined.

< 0°ROTATION >

The sheet is loaded on the rear of the device.
Rotation: OFF

< 90°ROTATION >

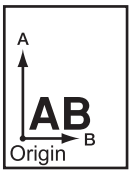

The sheet is loaded on the rear of the device.
Rotation: ON

< 180°ROTATION >

The sheet is loaded on the front of the device.
Rotation: OFF

< 270°ROTATION >

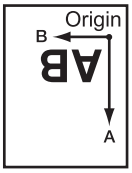

The sheet is loaded on the front of the device.
Rotation: ON

Change the cutting (plotting) order [SORTING]

The sorting function is used to re-arrange the pieces of cutting data transmitted from the host computer to change the order of cutting. Pieces of data to be transmitted to the plotter by application will be arranged in the order in which they are created or edited.
If touching up the scanned data, the part will be cut afterward. In that case, the cornered data will not be cut as the single stroked data. In such a case, the use of sorting function re-arranges the pieces of data in the correct order to enable one-stroke plotting.

Hint!

- Set the sorting function to [ON] to enable the automatic sheet feed function.
- The automatic sheet feed function enables to feed the required length of the sheet beforehand.

When the sorting is effective, a block of data from the starting point of pendown to the ending point of penup is taken as a unit for cutting. After the completion of cutting of one block, another block of data of which starting point is nearest to the completed data will be cut.

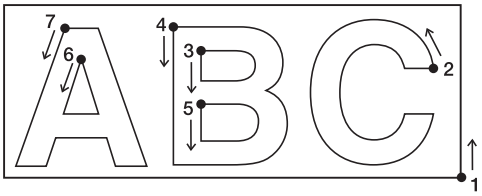

For data transmitted from the host computer, the starting position and cutting direction will not be changed.
• : Starting point of data = Starting point of cutting
Arrow : Direction of data = Cutting direction
Number : Block cutting order

Specify the cutting area with the [AREA] function to perform the block data cutting ahead on the area.
When cutting of the block data within the area is finished, cutting is continued in units of the specified area and cutting is done in the sheet feeding direction.

With no area specified

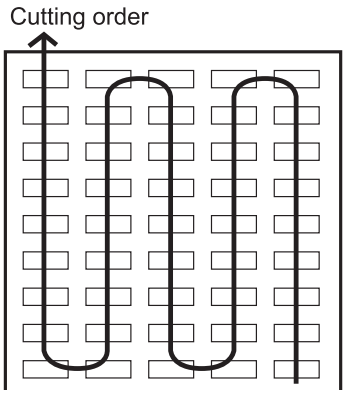

With area specified

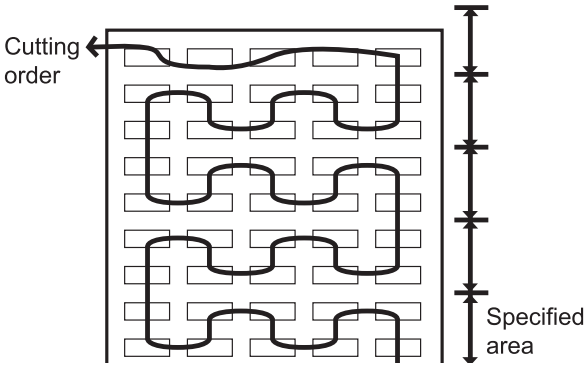

Setting value:

Sorting : ON, OFF
Auto feed : ON, OFF
Area : 10 to 5100 cm

Procedure

1. Push on the [FUNCTION] key anytime, in a local mode and displayed [SET UP].

   FUNCTION — **SET UP <ENT>**

2. Push on the [ENTER/HOLD] key.

   ENTER/HOLD — **SORTING < ent >**

3. Set the sorting to ON or OFF by pushing on the jog keys [▲] [▼].
   Push on the [ENTER/HOLD] key to display the [AUTO FEED].

   ▲▼ — **SORTING : ON**

   Hint!
   - Set the [SORTING] to OFF to return to the step 2 display.

4. Set the sorting to ON or OFF by pushing on the jog keys [▲] [▼].
   Push on the [ENTER/HOLD] key to display the AREA functions.

   ▲▼ — **AUTO FEED : ON**

5. Set the AREA functions by pushing on the jog keys [▲] [▼].
   Set the value in between the 10 - 5100 cm (10cm unit), or set to OFF.

   ▲▼ — **AREA : 10cm**

6. Push on the [ENTER/HOLD] key.

   ENTER/HOLD — **SORTING < ent >**

7. Push the [END] key twice to return to the local mode.

Important!
* If changing the set values, the received buffer will be cleared
* If setting the sorting function to ON, the received buffer size is to be 20MB.

Sorting sequence

1. Data are being transmitted.
   Unprocessed data size in the receiving buffer is displayed.
   Cutting is not conducted. The processed line segments are stored in the sorting buffer.

   CT1 * 2KB *

2. When data transmission is completed, the wait time until cut is displayed (remaining time is displayed in seconds).
   If no data is received while waiting until the cut starts, the countdown will start. The waiting time can be changed by "close time" of the communication condition. (☞P. 3-57)

   **** PLOT **** 5S**

3. Auto-feed is executed.
   Before starting cutting, the sheet is drawn by the length of data to be cut. If the sheet is not long enough to cover the whole data, the error shown below is displayed.

   *** SORTING * 1%**

   ERROR15 AUTOFEED

   After changing to a long sheet, transmit data or execute [No.COPIES]. (☞P. 3-13)

4. Cutting starts.
   Data that has been already cut is displayed in percents.

   *** SORTING * 10%**

5. Cutting completes.
The plotter enters the remote mode.

CT1 ** REMOTE **

Hint!

- When the SORTING is set to the ON state, cutting will not start until the specified close time has elapsed after receiving all pieces of data to be cut.
  It should be noted, however, that received pieces of data are sorted and cut in the following cases.
  - When the sorting buffer is full of data. (Approximately 540000 line segments.
  - In case changing the Toll number, SPEED, PRESSURE, or cutting condition.
  - When executing a feed command or origin change command

Switch the commands from a host computer [COMMAND]

Switch the commands from a host computer [COMMAND]Switch the commands according to the commands specifications from the host computer.
Display the recognized commands before starting to cut.

Setting value:

AUTO : Switch automatically to MGL-I or MGL-IIc according to the received data commands.
MGL - Ic1 : Use the value when receiving the MGL-I c1 commands data.
MGL-IIc : Use the value when receiving the MGL-II c commands data.

Important!

* When receiving a large data, the [AUTO] mode may not function normally.
  In that case, change the command to the specific command, MGL - Ic1, or MGL-IIc.
* When the value is set to [AUTO] in receiving a data from a computer, the display panel indicates the recognized command before starting to cut. In case the display panel continues to indicating the recognized command or displaying the [ERR16 UTO I/F], the command cannot be recognized automatically.
  In the case, change the command to MGL-I c1 or the MGL- IIc to perform cutting normally.
* The recognized command by the [AUTO] setting is effective until executing the data clear (☞P. 3-10) or pushing over the clamp lever.
* or pushing over the clamp lever.Make the following settings for each command individually.
  Therefore, when changing a command, the setting for the command is released and must be set again.
  (1) Parameters for communication protocol settings
  (2) Display language settings

Set the configurations with a computer [INTERFACE]

Set the communication condition with the RS-232C interface and the USB identification number.
Settings of the communication conditions differ with the command (AUTO, MGL-I c1 or MGL-II c) specified using the command change-over function.

Important! * If you have changed the step size, be sure to raise the pinch rollers using the sheet set lever and re-load the sheet on the device.

Setting value:

Baud rate	1200, 4800, 9600, 19200, 38400 (bps)	
Data bit	7, 8 (bit)	
Parity	NON, EVEN, ODD	
Stop bit	1, 2 (bit)	
Handshake	AUTO	HARD
	MGL-IIc	HARD, ENQACK, X-PRM, SOFT
	MGL-Ic1	HARD, XONOFF
Step size	AUTO(MGL-IIc)	0.025 (mm)
	AUTO(MGL-Ic1)	0.05 (mm)
	MGL-IIc	0.025, 0.01 (mm)
	MGL-Ic1	0.05, 0.1 (mm)
Close time *1	3 to 60 (sec.)	

*1 Close time
The minimum waiting time is required until the subsequent data is received.
The setting range is 3 to 60 seconds. If no data is received when the established waiting time has elapsed after the completion of cutting, the device will judge that one piece of data has completed to enable discrimination between the completed data and the subsequent data.

Guide to the establishment of close time.
- Breakpoint in object data to be cut by piece-cutting feature
- Waiting time Required to start division-cutting
- Waiting time retired to start outputting a sorting command

Set the each device number for a USB connection [DEVICE No.]

In case two and more plotters connected to a host computer with the USB cable, give the different plotter number to the each plotter.

Setting value:

DEVICE No. : 0 to 99

Command priority setting [PRIORITY]

This function is used to specify the setting that is given priority in terms of the following commands; either the setting established on the device or that established on the host computer is given priority.

The following is the settable commands.

Command name	Command
CommandPen selection command	ＳＰ；
Pen lowering speed setting command	ＶＳ；
Pen lifting speed setting command	ＺＡ；
Acceleration setting command	ＡＳ；
Pen pressure setting command	ＦＳ；,ＺＦ；
Blade-tip correction setting command	ＺＯ；

Setting value:

PANEL : The device operates using the setting established on its operation panel.
HOST : The device operates using the setting established by the command setting function of the host computer.

The maximum size of the response [DISTANCE]

Set the maximum size of the response in meter unit.
This function is effective in the MGL-I c1 used.

Setting value:

1 ～ 51 m

Hint!

- The set value not affect on the actual available cut area.
  In case the detected sheet size is smaller than the [DISTANCE], the detected size is to be the response value.

In use of the undetectable sheet [SHEET sensor]

The sheet sensor detects the presence/absence of a sheet and the sheet length.
Two sheet sensors are mounted on the platen.

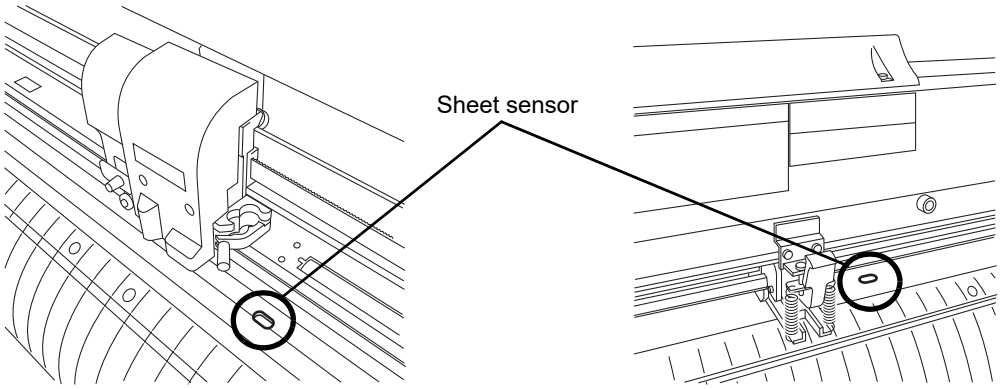

In the case where any of the following types of sheet is used, the sheet sensors will not be able to detect it to give the error message shown below.

- Transparent sheet that does not reflect the light coming from the sheet sensor.
- The sheet of which wrong side is black that does not reflect the light coming from the sheet sensor.

**** NO SHEET ****

In this case, cutting is enabled by setting the [SHEET SENSOR] function contained in the SET UP of FUNCTION to OFF.

Setting value:

OFF: The sheet sensor function is rendered ineffective.
ON : The sheet sensor function is rendered effective.

Important! * In the case where the [SHEET SENSOR] function is set to the OFF state, a cutting area has to be established since the device may cut data that exceeds the sheet or continue cutting if there is no sheet left. (☞P. 3-4)

Set the movement speed of carriage and sheet [UP SPEED]

This function is used to establish a traveling speed of the sheet and carriage to be employed when the tool placed in the carriage is in the raised position.
If a lower speed is specified, displacement of the sheet will be eliminated at the time of long-distance feed.

Setting value:

5, 10, 20, 30, 40, 50, 60, 70, 80, 90, 100, AUTO (cm/s)

Hint! • If the [AUTO] is specified, the SPEED setting established in the tool conditions will be employed. It should be noted, however, the minimum SPEED setting will be 10 cm/s.

Set the movement distance of carriage and sheet [JOG STEP]

This function is used to select the amount of travel of the carriage and sheet when the jog key (arrow key) is pressed.
In the following cases, accurate positioning will be enabled.

- When performing two-point axis alignment. (☞P. 3-4)
- When performing digitization.
- When establishing an origin at a desired location with accuracy. (☞P. 3-4)

Setting value:

For “mm”:
1.0: A press on the jog key will move the carriage and sheet by 1.0 mm.
0.1: A press on the jog key will move the carriage and sheet by 0.1 mm.
For “inch”:
1/16: A press on the jog key will move the carriage and sheet by 1.0 mm.
1/254: A press on the jog key will move the carriage and sheet by 0.1 mm.

Mute setting on the key noise and the error buzzer [BUZZER]

Set the key noise and the error buzzer to ON/OFF.

Important! * Affects to the registration mark detection noise. (☞P. 3-16)

Setting value:

ON : Buzzer sounds
OFF : Mute the buzzer

Switch the unit of length [MM/INCH]

Switch the displayed length unit between millimeter unit and inch unit.
The displayed jog movement unit and the sheet size unit depend on the setting.
The units for the feed length, range correction diagrams, and mark detect settings also change.

Setting value:

Millimeter : Display in a millimeter unit
Inch : Display in a inch unit

Uncut parts on the corner [ADJ-PRS OFS]

If some uncut parts on the starting point and the end point, increase the value. Due to the low pressure on the cutter blade, some parts remain uncut.
When using a slant blade (supplied as an option), some corner parts under 120- degree angle may remain uncut.

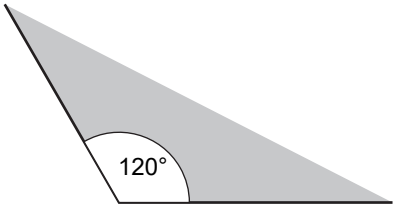

This is due to performing cutting automatically with lower pressure (approx.5 g) on the corners.

Some corners may enable to remain uncut for the lower cutting pressure prevents smoothly turning to the direction of movement. In case this, the setting enables to up the cutting pressure for smooth cutting on the corners.
In contrast, if the corner is not cut finely due to the high pressure, decreasing of the pressure offset may improve the cutting.

Set value:

0 to 7 : Approximetely 0 to 28g

Hint!

- If the cutting pressure is too strong and the corner can not be cleanly cut, it may be improved by reducing the correction pressure offset value.

Select the bumber of pinch roller to use [PINCH ROLL.]

Set the number f pinch roller to detect when the sheet detection.
Set the [ROLL. SELECTION] is [ON], enable to select the number of pinch roller when sheet detection.

Setting value:

PINCH ROLL. : 2, 3 (CG-75FXII (Plus), CG-130FXII (Plus))
: 2, 3, 4 (CG-160FXII (Plus))
ROLL. SELECT : ON, OFF

Set Over-cut Function [OVER CUT]

Set the availability of the over-cut function and the length of over-cutting.
When the length of over-cutting is specified, it starts to cut from the potion front by the specified length, and then stops at the position back by the length.

Setting value:

OFF, 0. 1 to 1.0mm (by 0.1mm)

OVER CUT: OFF

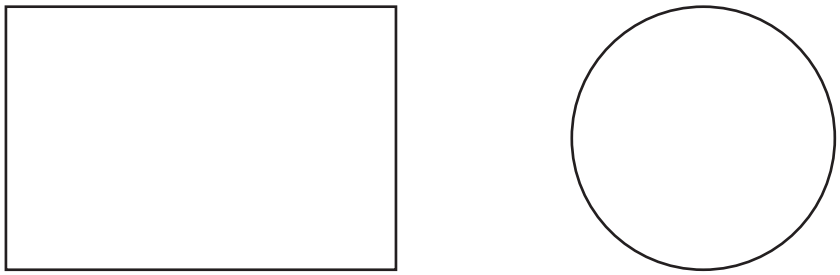

OVER CUT: 1.0 mm

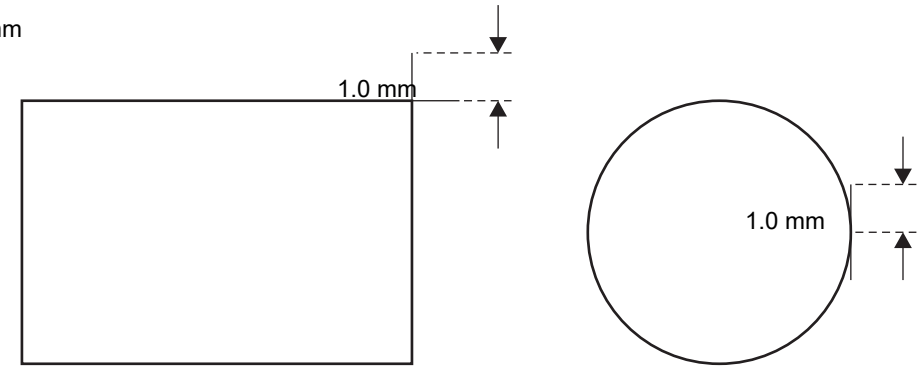

Important!

* The cutting remainder at the start and end position, specially for flexible media, can be adjusted by setting proper over-cutting, however it may cause damage to the media if the over-cutting is set excessively.

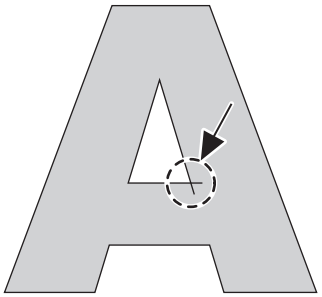

Set Start Mode [START MODE]

Set the mode after detecting the sheet.

Setting value:

Setting valueLCL : The mode switches to the standby condition of the local mode after detecting the sheet.

REM : The mode automatically switches to the remote mode after detecting the sheet.

Detect a registration mark automatically after the sheet is detected [SEARCH MARK]

Set the automatic registration mark search function performed after the sheet is detected.

If both of the registration mark detection and the registration mark search is valid, the function will search the registration mark automatically after the sheet is detected.
From the original point after detecting the sheet, it scans the set scan width back and forth at half intervals of the registration mark size. Then, when it finds a segment, a point or a printed material, the registration mark detection will be performed.
If the vertical line and the horizontal line are detected properly, it is reconginzed as a registration mark and the original point setting will be performed.

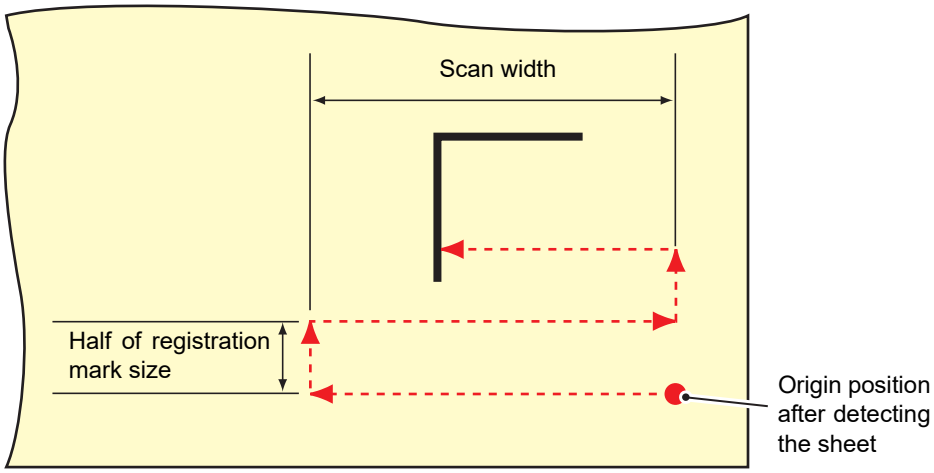

Procedure

1. Confirm the plotter is in the local mode.

CT1 020 050 0.30

2. Press the [FUNCTION] key.

FUNCTION

SQUARE CUT <ENT>

3. Select [SET UP] by pressing the jog key [▲] [▼].

SET UP <ENT>

4. Press the [ENTER/HOLD] key.

ENTER/HOLD

5. Select [SEARCH MARK] by pressing the jog key [▲] [▼].

SEARCH MARK<ent>

6. Press the [ENTER/HOLD] key.

ENTER/HOLD

SEARCH MARK :OFF

7. Select "ON" by pressing the jog key [▲] [▼].

SEARCH MARK :ON

8. Press the [ENTER/HOLD] key.

ENTER/HOLD

SCAN WIDTH :10 cm

9. Select scan width by pressing the jog key [▲] [▼].
   Set value: 75FXII Plus : 3 ～ 75cm、130FXII Plus : 3 ～ 130cm
   160FXII Plus : 3 ～ 160cm
   CG-GXII series : 3 ～ 30cm

SCAN WIDTH :20 cm

10. Press the [ENTER/HOLD] key.

ENTER/HOLD

SearchRange : 10 cm

11. Select the search range by pressing the jog key [▲] [▼].
    Set value: 5 to 50 cm

SearchRange : 30 cm

12. Press the [ENTER/HOLD] key.

ENTER/HOLD

13. Press the [END] key twice to return to the local mode.

END

Important!

* If it is not recognized as a registration mark or there is no response even if the fuction scans the area set for search, the message indicating the search failure will be displayed in a cetain time.
Then, it will return to the origin position and the mode will move to the normal semi-automatic registration mark detection mode.

SEARCH FAILED

⇩

SEARCH START POS

Set the function of VIEW FEED [VIEW FEED]

This function is used to set the feed and head move to confirm the result after test cutting (plotting).

- Rear Setting: Feed out
- Front Setting：Head move to the side

Setting value:

OFF: Feed and head move to the side does not performed.
ON ：Feed and head move to the side performed.

Reset the setting values [SETUP RESET]

Initialize the setting items and the parameters to the default values.

Procedure

1. Confirm the plotter in the local mode.

   CT1 020 050 0.30

2. Push on the [FUNCTION] key.

   FUNCTION — SQUARE CUT <ENT>

3. Select [SET UP] by pushing the jog keys [▲] [▼].

   SET UP <ENT>

4. Push on the [ENTER/HOLD] key.

   END — COMMAND < ent >

5. Select [SETUP RESET] by pushing the jog keys [▲] [▼].

   SETUP RESET< ent >

6. Push on the [ENTER/HOLD] key.
   Initialize the setting items and the parameters.

   ENTER/HOLD — llc COMMAND : ent

7. Pushing on the [END] key three times to return to the local mode.

   END — CT1 020 050 0.30

Chapter 4
In Case Of Trouble

This chapter describes on the actions on the errors.

Table of contents

Before taking a phenomenon as a trouble 4-2
Trouble for which error messages are given on the LCD 4-4

Before taking a phenomenon as a trouble

Take appropriate remedies referring to the phenomena described below.
If still the problem cannot be solved, contact us or the dealer.

Phenomenon	Cause	Remedy
Cannot turn on the power.	The power supply plug is not connected firmly.	Connect the power supply cable between the plotter and the plug outlet firmly.
The device cannot perform cutting (protting).	The plotter name specified on the host computer is wrong.	Check up the plotter name specified on the host computer.
	The interface cable is not securely connected to the device and/or the host computer.	Securely connect the interface cable.
	USB driver has not been installed.	Install USB driver supplied with FineCut.
Install USB driver supplied with FineCut.A communication error arises in prior to receiving data.	The power to the device and that to the host computer have been turned on in wrong order.	Turn on the power to the host computer first. Then, turn on the power to the device.
An error arises on the device when the host computer sends data to the device.	Communication conditions have not been properly established.	Check up the communication conditions. (☞P. 3-57)
	A wrong operation has been executed.	Execute the correct operation.
The device cannot detect a sheet. [** NO SHEET **]	A transparent sheet or a sheet of which wrong side is black is used.	Set the sheet sensor function to OFF. (☞P. 3-60)
The device performs cutting to produce broken lines.	Screw in the tool holder has loosened.	Tighten the screw.
	The blade of the cutter protrudes excessively.	Adjust the protruding amount of the blade adequately.
	Is the tool condition set to [HLF].	Set the tool condition to [CT1]~[CT5].
	The blade is chipped or has worn out.	Replace the blade with a new one.
	Difficulty in turning the blade tip.	Exchange to a new holder.
The data length and the actual cut length differ.	Because of the sheet feeding length difference according to the sheet thickness in use.	Correct the error margins by executing the distance compensation function. (☞P. 3-7)

Phenomenon	Cause	Remedy
Slippage of sheet arises in cutting.	Slippage of sheet arises in cutting.The pinch rollers and grit rollers fail to securely retain the sheet in position.	Check the position of the pinch rollers and grit roller and adjust them so that they securely retain the sheet in position.
	The clamp pressure (high or low mode) has not been properly selected.	Select the adequate clamp pressure. (☞P. 1-11)
	The roller sheet is not wound with properly tensed and is slack. The sheet meanders or becomes aslant at the time of the sheet feed.	Remove a slazck of the roll sheet and straighten the right and left end faces of the roll when loading the roll sheet on the device. Then, execute the sheet feed.
	The sheet has bent to come off the mount to have air bubbles between them.	If the sheet is to be cut longer, take care not to allow the sheet to bend while it is fed or cut to avoid an extra load to the sheet.
	The sheet setting direction (front / rear) and data output direction are not aligned.	If the sheet is to be cut longer, be sure to secure a sufficient space for working in the direction to which the sheet is fed. (Front: 1.5 m or more Back: 1.5 m or more)
	The sheet comes in contact with the floor surface. (The front end of the sheet is cut aslant.)	Decrease the cutting speed (SPEED) to reduce the load to the sheet when it contacts the floor surface.
	Side margins of the sheet at the location of the pinch rollers is inadequate.	Be sure to secure a side margin of 20 mm or more on each side of the sheet at the location of the pinch rollers.
• Drag the tool during operation. • Extra cutter marks remain on the sheet.	The sheet is warped.	The sheet is warped.Load the sheet on the device taking care not to warp it.
	The lifting/lowering of the tool is faulty.	Turn the power off and lift/lower the tool holder by hand. If the tool holder does not go up but remains in the lower position, call your distributor on the phone for maintenance.
Some parts remain uncut.	Low pressure on the cutter blade.	Increase the set value of [ADJPRS OFS].(

Trouble for which error messages are given on the LCD

Error message

Error messages shows as the error numbers.
Take an appropriate corrective measure according to the remedies given in the table below.

Error message	Cause	Remedy
ERR02 MAIN RAM	Trouble has occurred in the control RAM.	Please call your dealer or our company's sales office for service.
ERR04 EEPROM	Trouble has occurred in the system ROM.	
ERR06 BUFFER	Trouble has occurred in the receiver buffer.	
ERR08 POWER	Trouble related to the motor has occurred.	
ERR10 COMMAND	Code other than command data have been received.	Check up the command data sent from the host computer.
ERR11 PARAMETER	A parameter outside the numerical limits has been received.	Check up the parameter.
ERR12 DEVICE	The device received an improper device control command.	Check up the device control command.
ERR13 PM OVER	Data on polygon has overflown the polygon buffer.	Divide the data on polygon.
ERR15 AUTO FEED	The device has failed to feed the sheet by the length specified with ZX command.	After the receipt of data sent from the host computer, replace the sheet with a longer-dimension one and execute the plural sheets cutting.
	During division cut, the device has failed to feed the sheet, according to the second data, by the length specified by the first data.	Load a longer sheet on the device and re-set the device in the remote mode.
ERR16 AUTO I/F	The device has failed to detect a command automatically.	Set the command name. (☞P. 3-57)
ERR20 I/O	Communication conditions are wrong.	Establish the same communication conditions with those established on the host computer. (☞P. 3-57)
ERR27 BUFFERover	The interface is faulty.	Establish the same communication conditions with those established on the host computer or check up the interface cable. (☞P. 3-57)
ERR30 OPERATION	An inappropriate operation was performed on the control panel.	Perform the correct operation.
ERR31 NO DATA	The device has executed the plural sheets cutting to find that there is no data in the receiver buffer.	Refer to the explanation of the plural sheets cutting function. (☞P. 3-13)
ERR32 DATAtooBIG	The amount of received data is too large for the device to perform the plural sheets cutting.	
ERR33 SHEET SIZE	The sheet is too short in terms of the feeding direction.	Use a longer sheet.

Error message	Cause	Remedy
ERR34 DAT REMAIN	The device has executed an improper operation while it is put on hold.	Press the [REMOTE] key to cut the remaining data or clear it. (☞P. 3-10)
ERR36 MARKdetect	No registration mark detected. (Right after the sheet detection)	Check whether or not the sheet is curling up.
		Confirm the appropriate detect starting point specified. (☞P. 3-30)
		Confirm the black registration mark printed against the white back-ground.
		Confirm no dust or dirt in between the registration marks.
		In case setting value of [DIST. REVI.] is [BEFORE], confirm no mistake on the specified length. (☞P. 3-30)
		Confirm the status and the settings described above. If still no registration mark detected, contact your distributor or us.
ERR36 MARKdetect Display the "ERR38 MARKSCALE" and the "JOG & ENT or END" alternately.	No registration mark detected. (During copy-cutting operation) ☞P.3-39)	In case using a non elastic sheet or a wider sheet (approximately 800mm, and more), use three pinch rollers to hold the sheet.
		Confirm no dust or dirt in between the registration marks.
		Confirm the black registration mark printed against the white back-ground.
		Confirm no mistake on the registration mark settings. (☞P. 3-30)
		In case using a non elastic sheet, the used registration mark size should be 8mm size and more. Make 8mm and more margins between the copied registration marks as well.

Error message	Cause	Remedy
ERR36 MARKdetect Display the "ERR38 MARKSCALE" and the "JOG & ENT or END" alternately.	No registration mark detected. (During copy-cutting operation) (☞P.3-39)	In case a sheet raised during the registration mark detection, set the PAPER HOLD to OFF.
		In case error occurs, the Light Pointer stops at the detection starting point. If the position is improper, move the Light Pointer to the appropriate position using the jog keys. Type 1 Registration Mark Type 2 Registration Mark 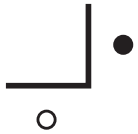 ●: Starting point of the registration mark detection for the landscape copy. ○: Starting point of the registration mark detection for the portrait copy. Retry the registration mark detection until detected successfully. In case no registration mark detected even if retrying the detection for several times, contact your distributor or our office.
ERR37 MARK ORG	Detect the origin point out of the cut area.	Arrange the registration marks inside of the sheet.
ERR39 MARK ID	The registration mark ID could not be detected. (Data without ID)	Disable detection for data without an ID.
	The registration mark ID could not be detected. (Data with ID)	Check whether or not the sheet is curling up.
		Confirm the black registration mark ID printed against the white back-ground.
		In case using a non elastic sheet or a wider sheet (approximately 800mm, and more), use three pinch rollers to hold the sheet.
		In case a sheet raised during the registration mark detection, set the PAPER HOLD to OFF.

Error message	Cause	Remedy
ERR40 MOTOR A	The sheet feeding motor has been applied with an extra load.	Turn off the power to the device once. Then, re-turn it on. Set the sheet setting to [HEAVY]. (☞P. 3-44) When in use of a roll sheet, perform sheet feeding as needed margins in advance. If the same error message re-appears on the LCD, contact your distributor.
ERR41 MOTOR B	The carriage driving motor has been applied with an extra load.	
ERR42 A CURRENT	An overcurrent error in the motor in the lengthwise direction of the sheet has been detected.	
ERR43 B CURRENT	An overcurrent error in the motor in the widthwise direction of the sheet has been detected.	
ERR50 ORIGIN	The device has failed to detect the sheet size.	Turn off the power to the device once. Then, re-turn it on. If the same error message re-appears on the LCD, contact your distributor. When in use of a roll sheet, perform sheet feeding as needed margins in advance.
ERR51 PINCH POS*	Pinch rollers are not properly set on the grit roller.	Set the pinch rollers on the grit roller.

Warning message

The messages given below appear under the remote mode.
They do not indicate errors but require an appropriate action.

Message	Cause	Remedy
CUT1 * REMOTE *	The device is in the remote mode.	A press on the [REMOTE] key will cause the device to enter the local mode.
CUT1 * 128KB *	This indicates the amount of data received.	When starting cutting, the amount of data will decrease in increments of 1 KB.
** OFFSCALE **	The data on cutting exceeds the effective cutting area.	Use a larger sheet, decrease the amount of data or execute the divided cutting function.
** NO SHEET **	Move the clamp lever without attaching a sheet.	Move the clamp lever after attaching a sheet.
** VIEW **	The device has received the not-ready-mode signal (NR;) from the host computer to enter the local mode.	Execute required operations such as the sheet detection or the establishment of an origin. Then, press the [REMOTE] key to make the device to enter the remote mode.
** DIGITIZE **	The device has received the digitization command (DP;) from the host computer to enter the digitization mode.	Move the pen to a desired location, where necessary, and press the [REMOTE] key. To reset the digitization mode, execute the data clear using the [DATA CLEAR] key.
* 1/10 COPY *	There was an origin update command (ZT ;,!! PG;) in the received data, one sheet was copied and finished.	Can not cut the number of sheets.
	Copy cut position of register mark has exceeded 51m from start point.	Retry sheet detection.
* DIVISION * 5s	The device has finished the cutting of data that exceeds the sheet width using the division cut and is now waiting for the receipt of next data.	If the device does not receive any data from the host computer within ten seconds, it will recognize the data has ended. Then, the device will perform the frame cutting and mark cutting and enter the local mode.
* END DIVISION *	This message appears in the following cases. • In the case where the device has received data that contains the origin updating command (ZT;, !PG;) • In the case where the sheet width is 1 cm or less • In the case where the sample cutting data exceeds the sheet width • In the case where the twopoint axis alignment is set to ON • Registration marks have already detected.	There is no problem as long as the register marks can be successfully read after the next pattern .If more than 5 patterns in succession can not be read, [Error 36 MARK DETECT] (☞P. 4-5) is displayed.

Message	Cause	Remedy
COPY SKIP	Mark cannot be detected in performing continuous copy. Skip one pattern.	If the marks are successfully detected after skipping one pattern, there is no problem. In case marks cannot be detected continuously over five patterns, [ERR36 MARKdetect] is displayed. (☞P. 4-5)
MEDIA SKEW <ENT>	The sheet may be misaligned, or over the setting value of the SKEW CHECK. (☞P. 3-33)	Push on the [ENTER] key after resetting the sheet.

Chapter 5
Appendix

The appendix describes the replacement of blade and the specifications of the main unit of the device.

Table of contents

Specifications of the main unit 5-2
Cutter blade 5-4
Sheet setting 5-7
Function Flowchart 5-8
Functions 5-12

Specifications of the main unit

Item		CG-75FXII (Plus)		CG-130FXII (Plus)		CG-160FXII (Plus)	
Acceptable sheet width		mm	inch	mm	inch	mm	inch
		90 ~ 1040	4 ~ 40	90 ~ 1580	4 ~ 62	90 ~ 1880	4 ~ 62
Effective cutting area *1		760mm x 51m		1300 mm x 51 m		1600 mm*2×51 m	
Automatic Cutting area*3		885 mm		1425 mm		1720 mm	
Maximum speed*4		140 cm/s (At 45 degrees direction with the pen up.)					
Speed setting (cutting/plotting)		1 ~ 10 cm/s (in 1 cm/s steps), 10 ~ 50 cm/s (in 5 cm/s steps), 50 ~ 100 cm/s (in 10 cm/s steps)					
Mechanical resolution		5μm					
Program steps		25 μm, 10 μm (MGL-IIc), 100 μm, 50μm (MGL-Ic)					
Repeatability		±0.2 mm (excluding expansion/contraction due to film temperatures)					
Guaranteed range of accuracy (repeatability)*5		760mm x 10 m		1300 mm x 10 m		1600 mm x 10 m	
		(depending on the specified film and cutting conditions)					
Maximum pressure		400 g (Plus series: 500 g)					
Pressure setting	Cutter	10 ~ 20 g (2 g step), 20 ~ 100 g (5 g step), 100 ~ 400 g(Plus series: 500 g) (10 g step)					
	Pin	10 ~ 20 g (2 g step), 20 ~ 100 g (5 g step), 100 ~ 400 g(Plus series: 500 g) (10 g step)					
	Pen	10 ~ 20 g (2 g step), 20 ~ 100 g (5 g step), 100 ~ 150 g (10 g step)					
Acceptable films		PVC sheets (0.2 mm thick or less), fluorescent sheets *6, reflective sheets *6, laminated sheets (0.2 mm thick or less)					
Acceptable sheet for pouncing		Paper (thickness: 0.06 to 0.13 mm) *7					
Applicable tools		Cutters, water-ink ball-point pens, oil-ink ball-point pens, Commercial product for a boll-point pen *8					
Safety Standard		VCCI-Class A, FCC-Class CE Marking (EMC,Low Voltage, RoHS Directive), CB Report, ICE 62368-1 ETL, EAC mark					
Commands *9		MGL-IIc, MGL-Ic1					
Interface		RS-232C, USB					
Receiver buffer		30 MB standard (20Mb when the sorting function is effective.)					
Operating environment		5 to 35°C, 35 to 75 % (Rh) Non-condensing					
Power capacity		AC100 to 240 V, 1A ～ 0.6A 50/60Hz					
Outside dimensions	(W)	1285 mm		1825 mm		2125 mm	
	(D)	700 mm					
	(H)	1217 mm					
Weight (With the legs attached)		47 kg (with legs)		62 kg (with legs)		70 kg (with legs)	
Noise *10	Standby	49 dB (Absorption fan at low speed)					
	Operation	60 dB (Continuous sounds)					

*1： The maximum feeding length is restricted by the software to be used.
*2： When using four Pinch Rollers. In case using Pinch Roller 1 and Pinch Roller 2, the effective cutting area is 1570 mm.
*3： The sheet width with the cut off function available.
*4： The maximum speed may be limited by the sheet size. (☞ P. 2-13)
*5： To achieve the guaranteed range of accuracy, the next page's requirements shall be satisfied.
*6： Provided that the blade specific to fluorescent sheets and the blade specific to reflective sheets are used.
*7： Pouncing tool intended specifically to pouncing shall be used.
*8： The commercial product between the 8 to 9 mm diameter. Accuracy and the quality of the image are covered under warranty for the pen tip position differs according to the pen in use.
*9： When in use of the USB, the ESC type of the commands in the MGL-IIc commands cannot be used.
*10： Standard measure of our products.

Repeatability condition

Plotter conditions

- Exclusive roll bars and sheet set rings (when a roll sheet is used) shall be used.
- The clamp pressure shall be set to “HIGH.”

Sheet setting conditions

- Side margin of the sheet: 20 mm or more
- Front side condition of the sheet: No leaning or rising shall be observed.
- The sheet shall not bend and shall not come off the base paper to invite air bubbles between them.
- The sheet shall be loaded in the correct matter using the sheet feeding function.
- A roll sheet shall not slacken. (No difference in height shall be observed between the right and left end faces.)

Cutting speed

- 40 cm/s or less (when the cutter supplied with the unit is used)

Data on cutting

- Test pattern for maintenance (continuous 10 strokes in the lengthwise direction)
  While the sheet is being cut, the sheet shall not come off the base paper to invite air bubbles between them due to an excessive bend.

Types of sheets

- Depends on material of the cutting sheet or ink jet media in use, accuracy of the repeatability may not be guaranteed.

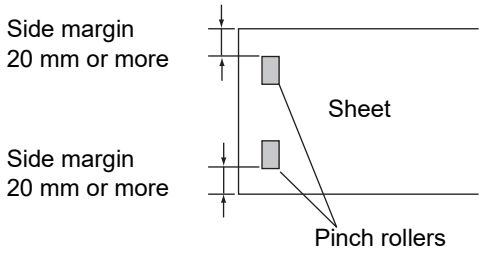

Cutter blade

Important!

* The cutter blade is sharp. Keep your fingers away from the blade.
* Never swing the cutter holder to avoid danger. Blade can jut out from the cutter holder, if swung.
* Keep the cutter blade out of reach of children.
  Discard the used cutter blade under your district low.

Replacing the cutter blade

If the cutter blade is chipped or blunt, replace it with a new one.
New blades (low-pressure blade set for PVC sheet: Model SPB-0030) are available from your distributor MIMAKI sales office.

Replacing the blade of the cutter supplied with the unit as an accessory

1. Screw the cutter holder to remove the cutter blade.
2. Exchange the cutter blade with tweezers.

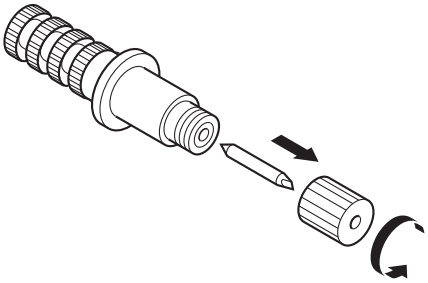

Replacing the blade of any cutter other than that supplied with the unit

1. Loosen the locknut.

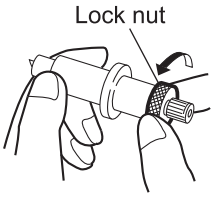

2. Turning the adjusting knob, draw out the cutter from the holder.

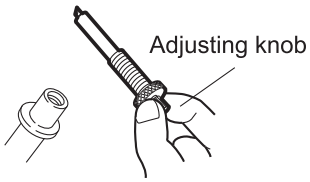

3. Replace the blade with a new one using tweezers or the like.

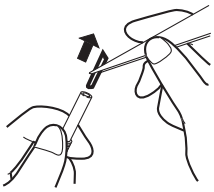

Adjusting the cutting edge

Adjustment of the blade of any cutter other than that supplied with the unit is described below.
After the completion of adjustment, be sure to set cutting conditions and perform test cutting to check the blade for sharpness.
For details on adjusting the cutting edge of the accessory, refer to (☞P. 2-4) .

1. Loosen the locknut.

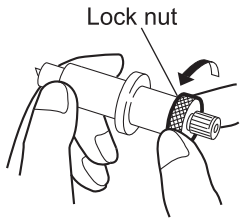

2. Turn the adjusting knob to adjust the protruding amount of the blade.

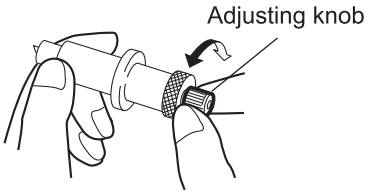

3. Tighten the locknut to secure the adjusting knob.

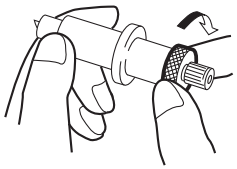

$$\text{Cut in amount} = \frac{(\text{Film thickness} + \text{Base paper thickness})^{*1}}{2}$$

*1 Film thickness < Base paper thickness

Protruding amount of the cutter blade = 0.3 to 0.5mm

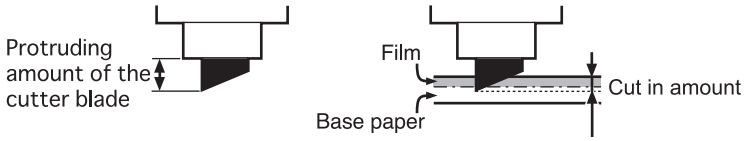

Hint!

- The blade adjuster (model: OPT-S1005) will facilitate the adjustment of the protruding amount of the blade.

How to replace the blade for sheet cutter

If the cutter blade is chipped or blunt, replace it with a new one.

Important!

* The cutter blade is sharp. Keep your fingers away from the blade.
* Keep the cutter blade out of reach of children.
  Discard the used cutter blade under your district low.

Procedure of replacing the blade for sheet cutter.

1. Loosen the screws of the blade for sheet cutter.
2. Remove the blade.

Important!

* Handle the sheet cutter with care when replace it so as not to touch the blade to the upper platen, or it may break the blade edge.

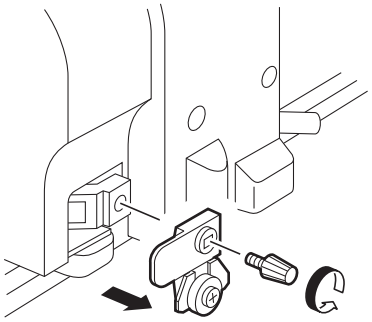

3. Attach a new blade.
4. Tighten up screws to fix the blade for sheet cutter.

Important!

* Tighten the blade for sheet cutter, or the screws loosened and the blade may be off.

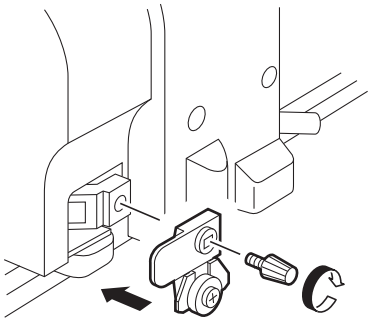

Sheet setting

When in changing the cutting (plotting) sheet type, distance correction may be required according to the sheet thickness in use. (☞P. 3-7)
In that case, the following memorandum sheet is useful to make a note of the sheet type and the distance correction value.

Sheet Name: **A=** **B=**	**Sheet Name:** **A=** **B=**
Sheet Name: **A=** **B=**	**Sheet Name:** **A=** **B=**
Sheet Name: **A=** **B=**	**Sheet Name:** **A=** **B=**
Sheet Name: **A=** **B=**	**Sheet Name:** **A=** **B=**
Sheet Name: **A=** **B=**	**Sheet Name:** **A=** **B=**
Sheet Name: **A=** **B=**	**Sheet Name:** **A=** **B=**

Function Flowchart

Functions invoked with the specific keys

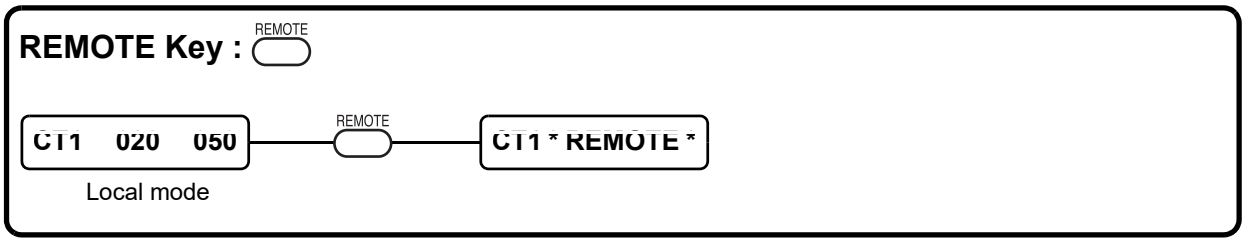

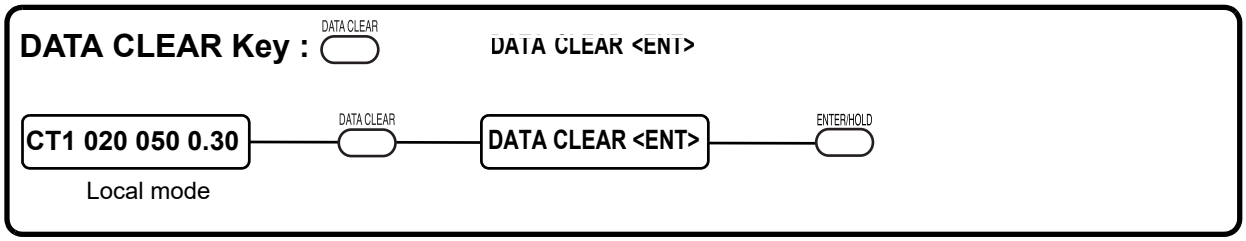

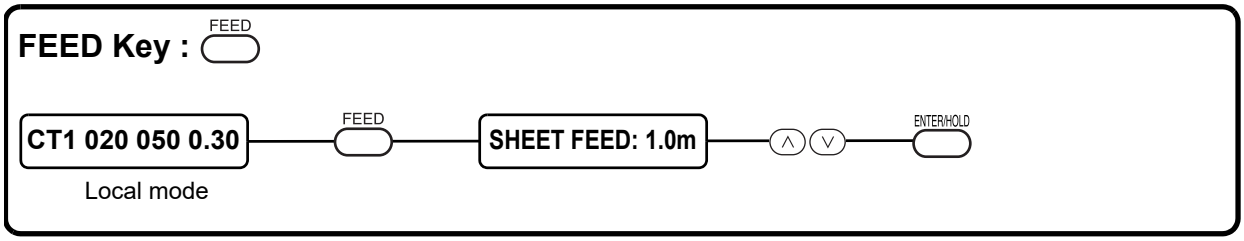

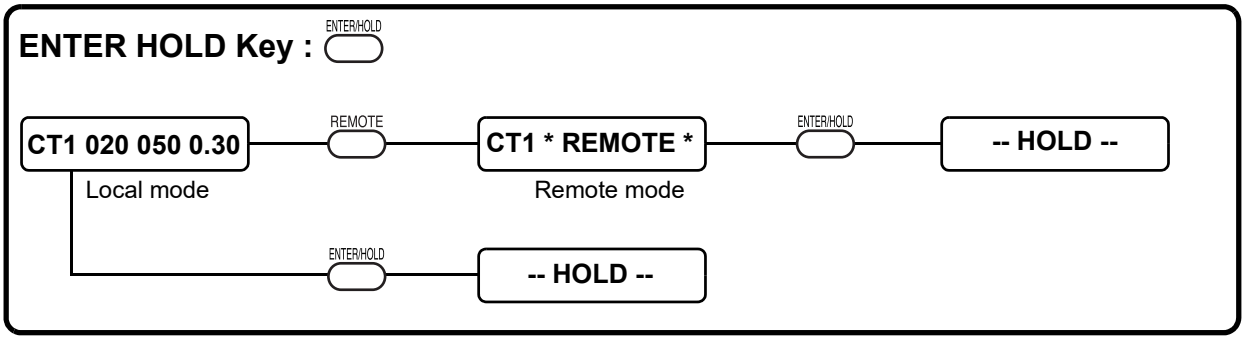

TOOL key (Settings of Tool conditions) : TOOL

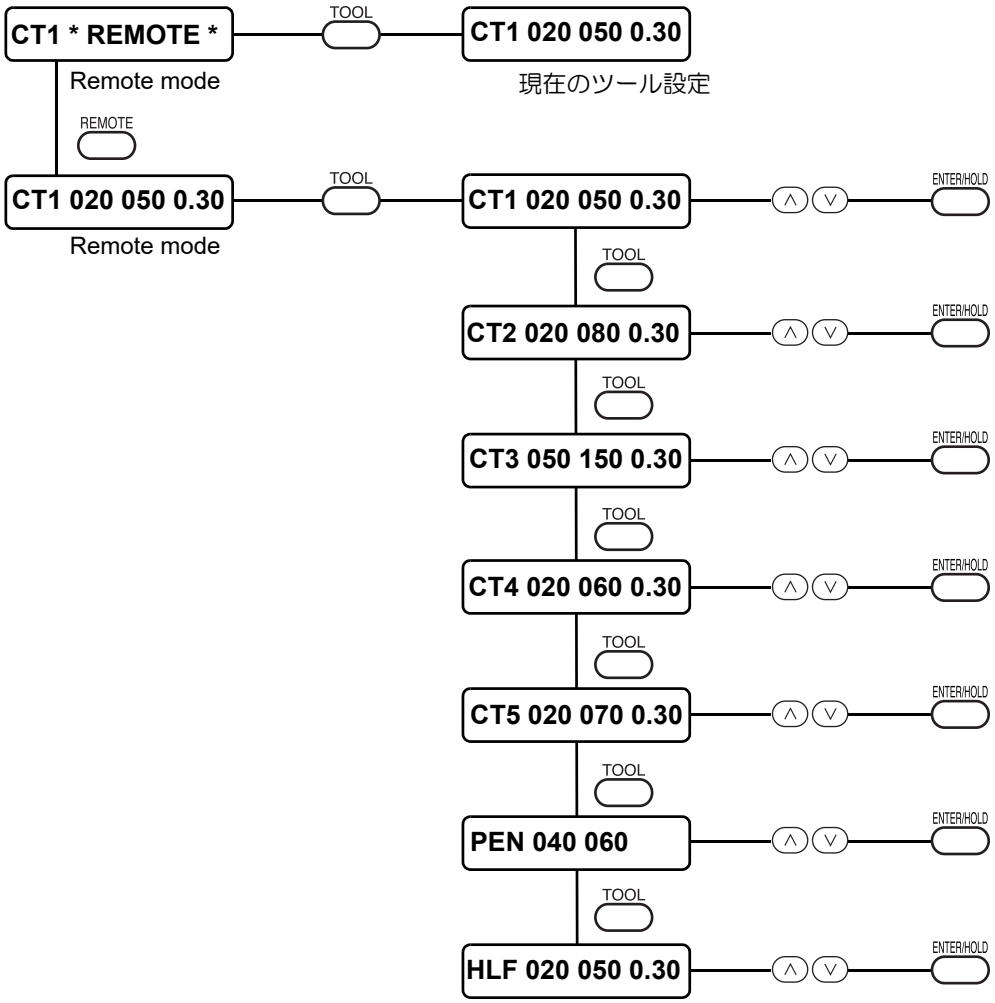

TOOL key (DIST.COMP.) : TOOL

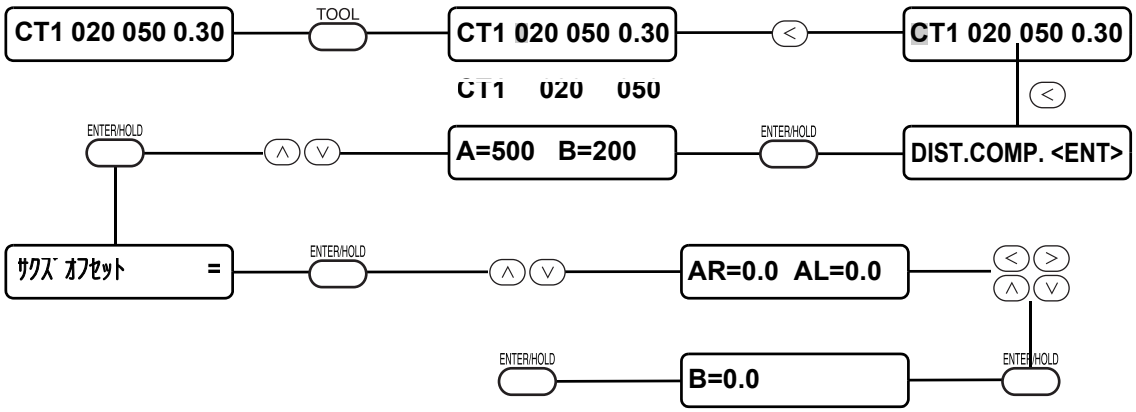

Functions invoked with the jog mode (jog keys)

Setting an origin

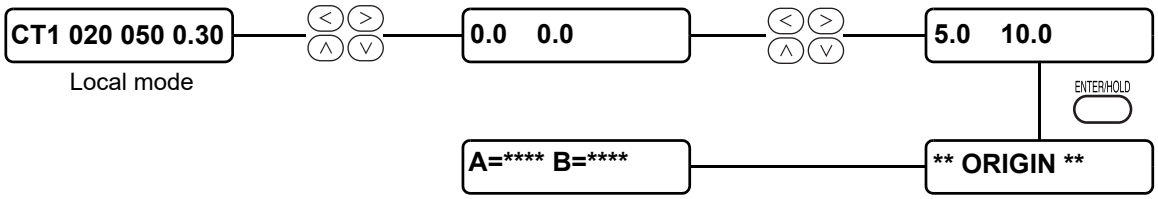

Cutting area

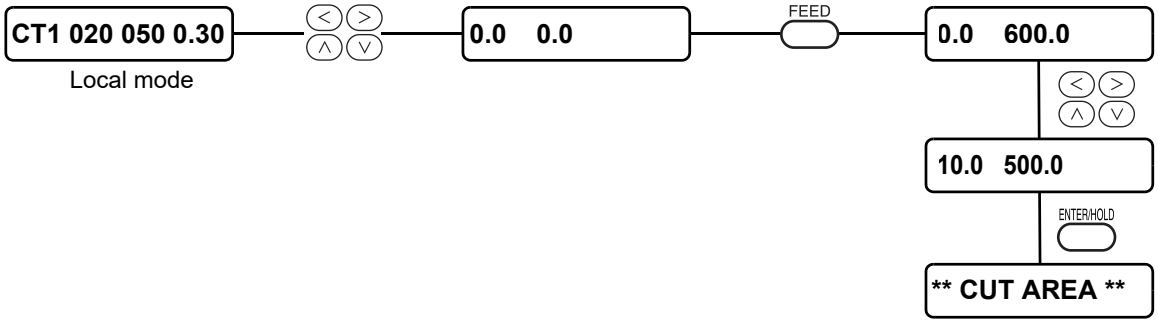

Two-point axis alignment

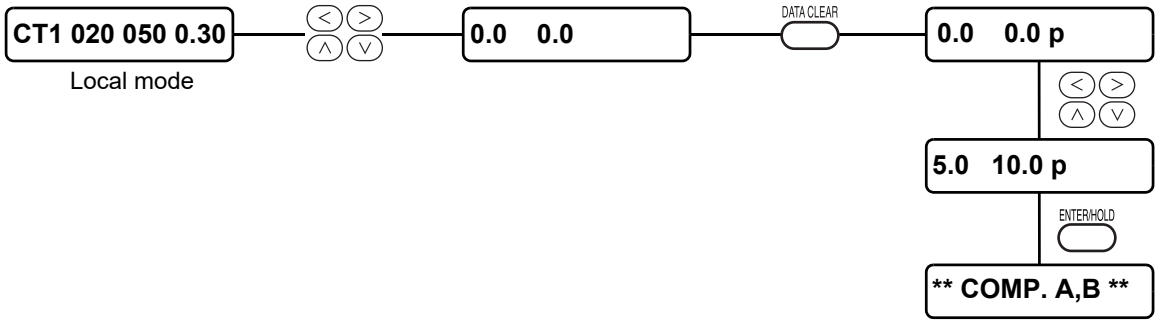

Paper cut

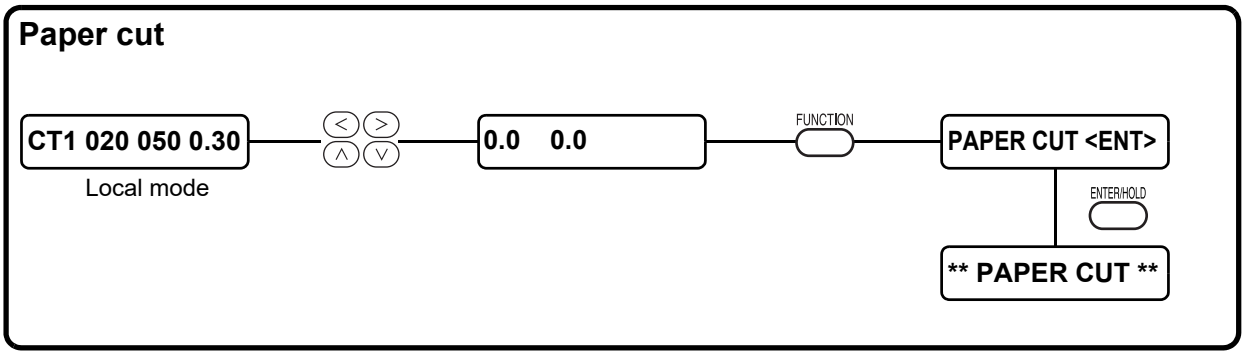
CT1 020 050 0.30
Local mode
0.0 0.0
FUNCTION
PAPER CUT <ENT>
ENTER/HOLD
** PAPER CUT **

Functions

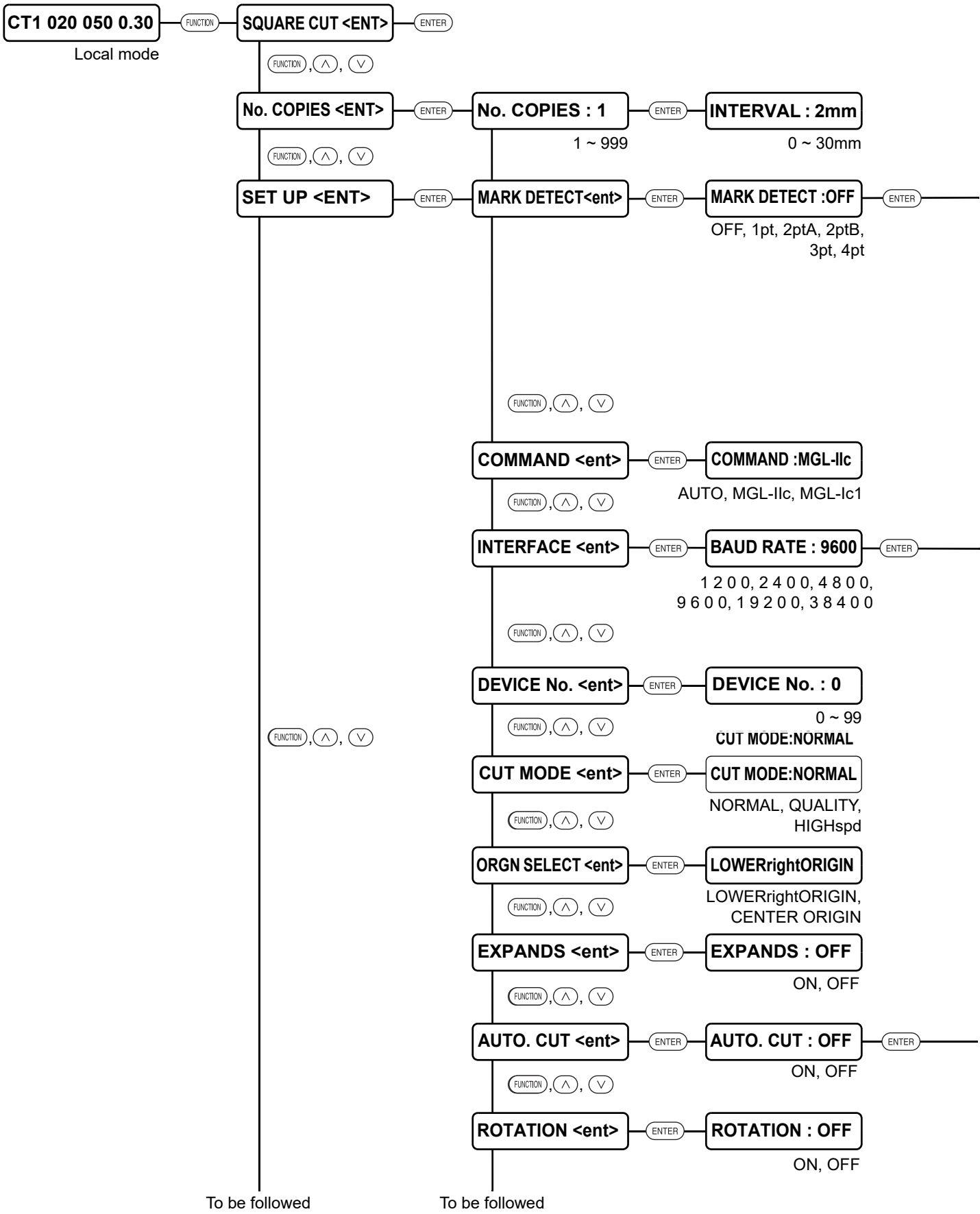
CT1 020 050 0.30
Local mode
FUNCTION
SQUARE CUT <ENT>
ENTER
FUNCTION, ∧, ∨
No. COPIES <ENT>
ENTER
No. COPIES : 1
1 ~ 999
ENTER
INTERVAL : 2mm
0 ~ 30mm
FUNCTION, ∧, ∨
SET UP <ENT>
ENTER
MARK DETECT<ent>
ENTER
MARK DETECT :OFF
OFF, 1pt, 2ptA, 2ptB, 3pt, 4pt
ENTER
FUNCTION, ∧, ∨
COMMAND <ent>
ENTER
COMMAND :MGL-IIc
AUTO, MGL-IIc, MGL-Ic1
FUNCTION, ∧, ∨
INTERFACE <ent>
ENTER
BAUD RATE : 9600
1 2 0 0, 2 4 0 0, 4 8 0 0, 9 6 0 0, 1 9 2 0 0, 3 8 4 0 0
ENTER
FUNCTION, ∧, ∨
DEVICE No. <ent>
ENTER
DEVICE No. : 0
0 ~ 99
FUNCTION, ∧, ∨
FUNCTION, ∧, ∨
CUT MODE:NORMAL
CUT MODE <ent>
ENTER
CUT MODE:NORMAL
NORMAL, QUALITY, HIGHspd
FUNCTION, ∧, ∨
ORGN SELECT <ent>
ENTER
LOWERrightORIGIN
LOWERrightORIGIN, CENTER ORIGIN
FUNCTION, ∧, ∨
EXPANDS <ent>
ENTER
EXPANDS : OFF
ON, OFF
FUNCTION, ∧, ∨
AUTO. CUT <ent>
ENTER
AUTO. CUT : OFF
ON, OFF
ENTER
FUNCTION, ∧, ∨
ROTATION <ent>
ENTER
ROTATION : OFF
ON, OFF
To be followed
To be followed

Enable to setting [MARK DETECT] is not [OFF]
[Data ID code] is supported only for CG-FXII Plus series

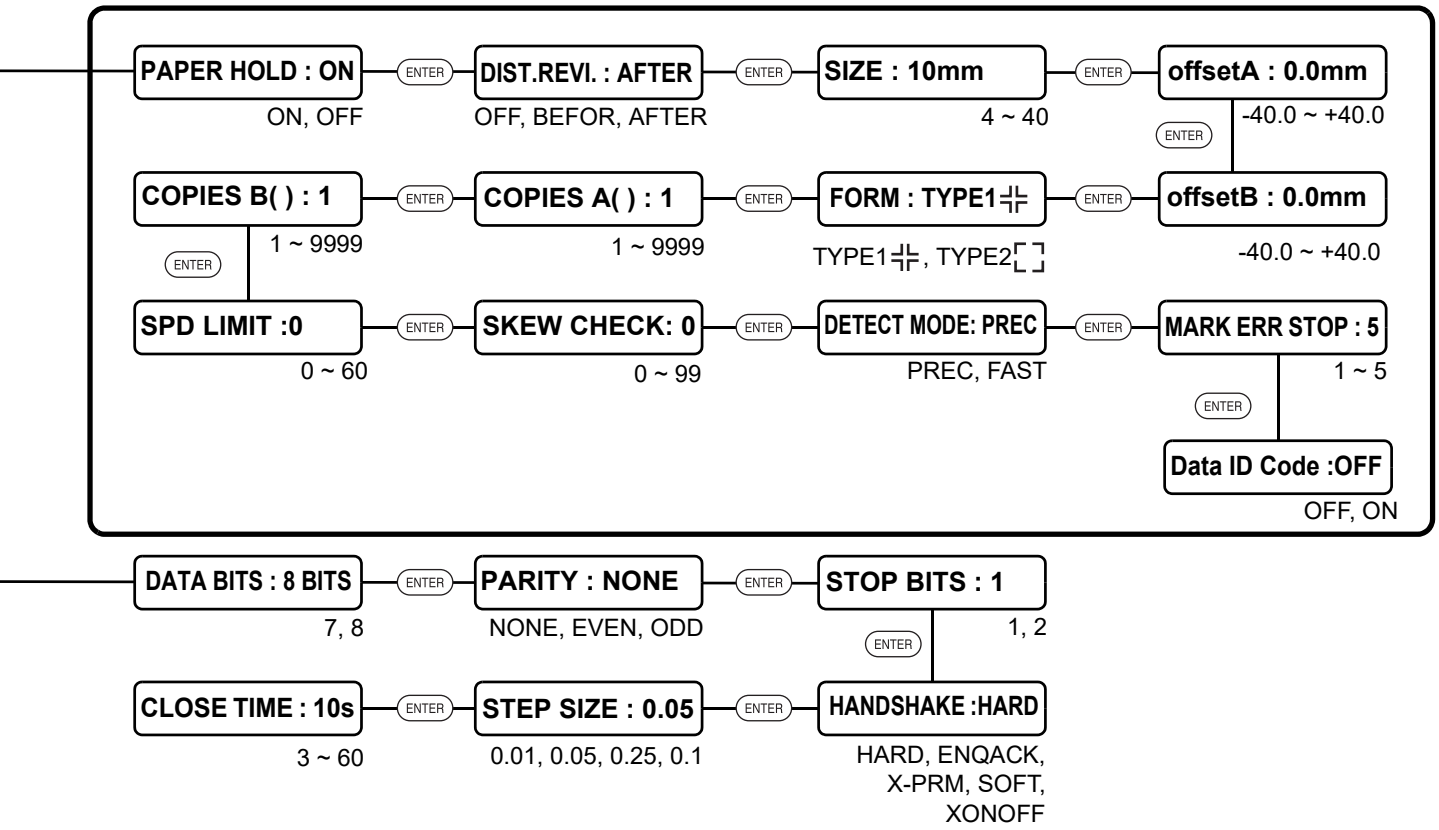

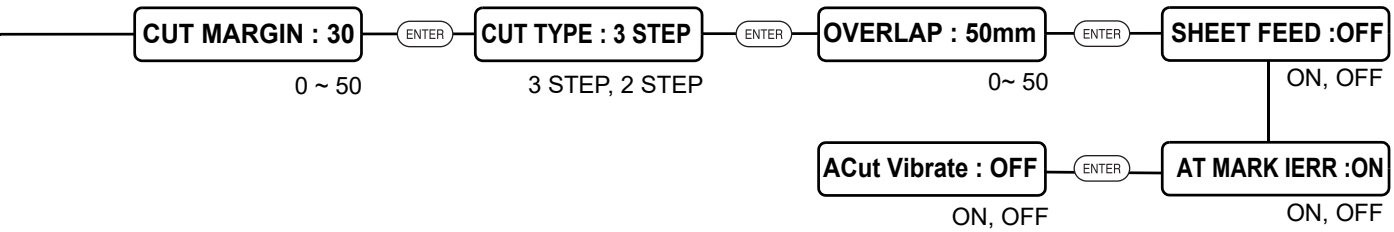

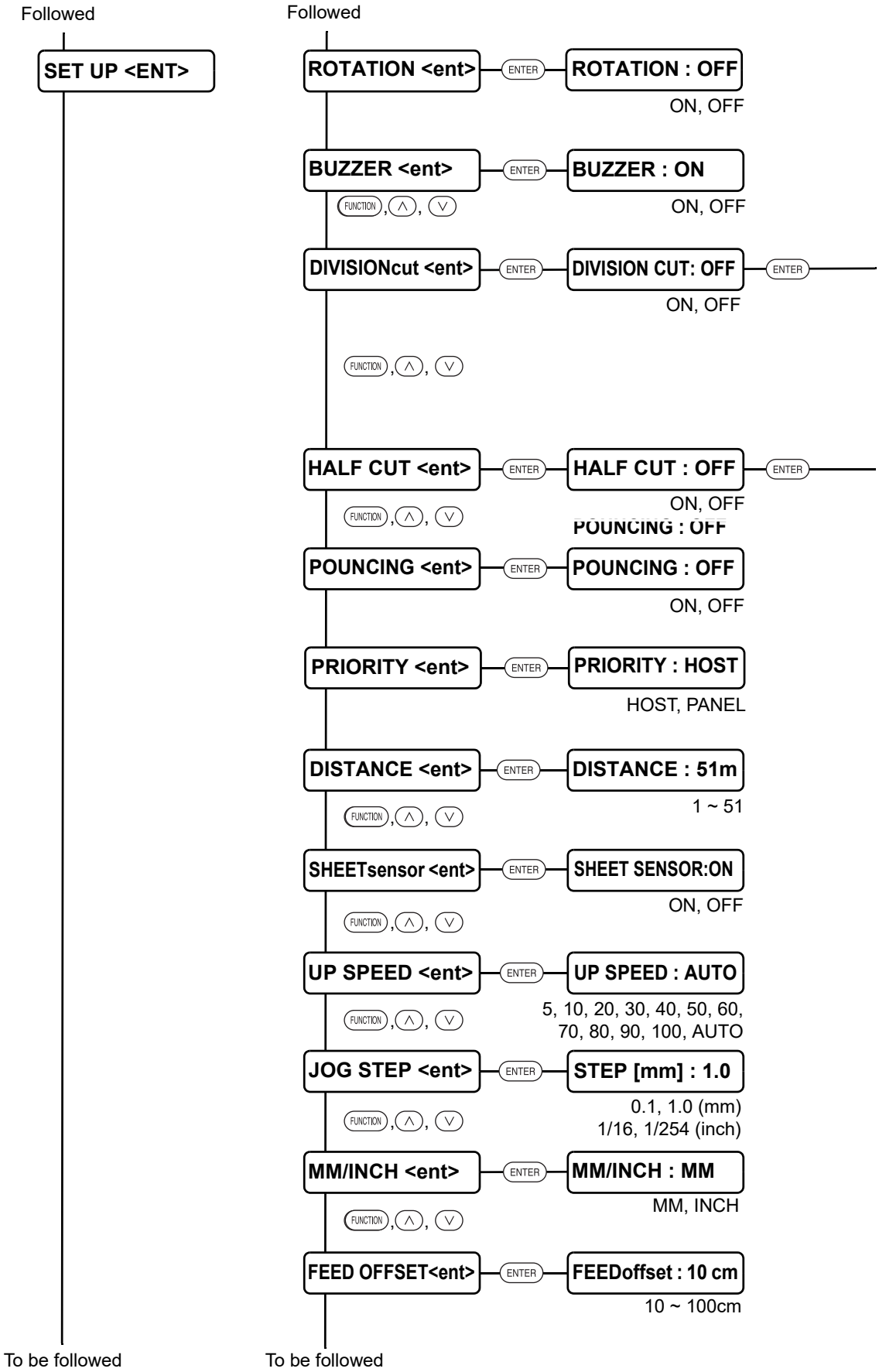
Followed
Followed
SET UP <ENT>
ROTATION <ent>
ENTER
ROTATION : OFF
ON, OFF
BUZZER <ent>
ENTER
BUZZER : ON
FUNCTION, ∧, ∨
ON, OFF
DIVISIONcut <ent>
ENTER
DIVISION CUT: OFF
ENTER
ON, OFF
FUNCTION, ∧, ∨
HALF CUT <ent>
ENTER
HALF CUT : OFF
ENTER
ON, OFF
FUNCTION, ∧, ∨
POUNCING : OFF
POUNCING <ent>
ENTER
POUNCING : OFF
ON, OFF
PRIORITY <ent>
ENTER
PRIORITY : HOST
HOST, PANEL
DISTANCE <ent>
ENTER
DISTANCE : 51m
1 ~ 51
FUNCTION, ∧, ∨
SHEETsensor <ent>
ENTER
SHEET SENSOR:ON
ON, OFF
FUNCTION, ∧, ∨
UP SPEED <ent>
ENTER
UP SPEED : AUTO
FUNCTION, ∧, ∨
5, 10, 20, 30, 40, 50, 60,
70, 80, 90, 100, AUTO
JOG STEP <ent>
ENTER
STEP [mm] : 1.0
0.1, 1.0 (mm)
1/16, 1/254 (inch)
FUNCTION, ∧, ∨
MM/INCH <ent>
ENTER
MM/INCH : MM
MM, INCH
FUNCTION, ∧, ∨
FEED OFFSET<ent>
ENTER
FEEDoffset : 10 cm
10 ~ 100cm
To be followed
To be followed

Enable to setting [DIVISIONcut] is [ON]

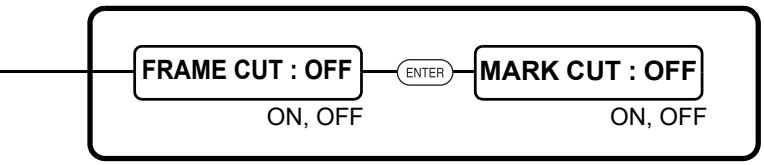

Enable to setting [HALF CUT] is [ON]

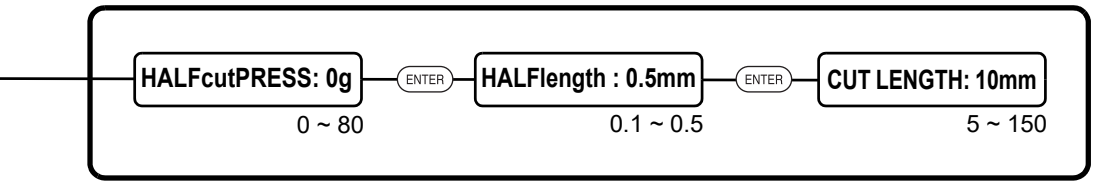

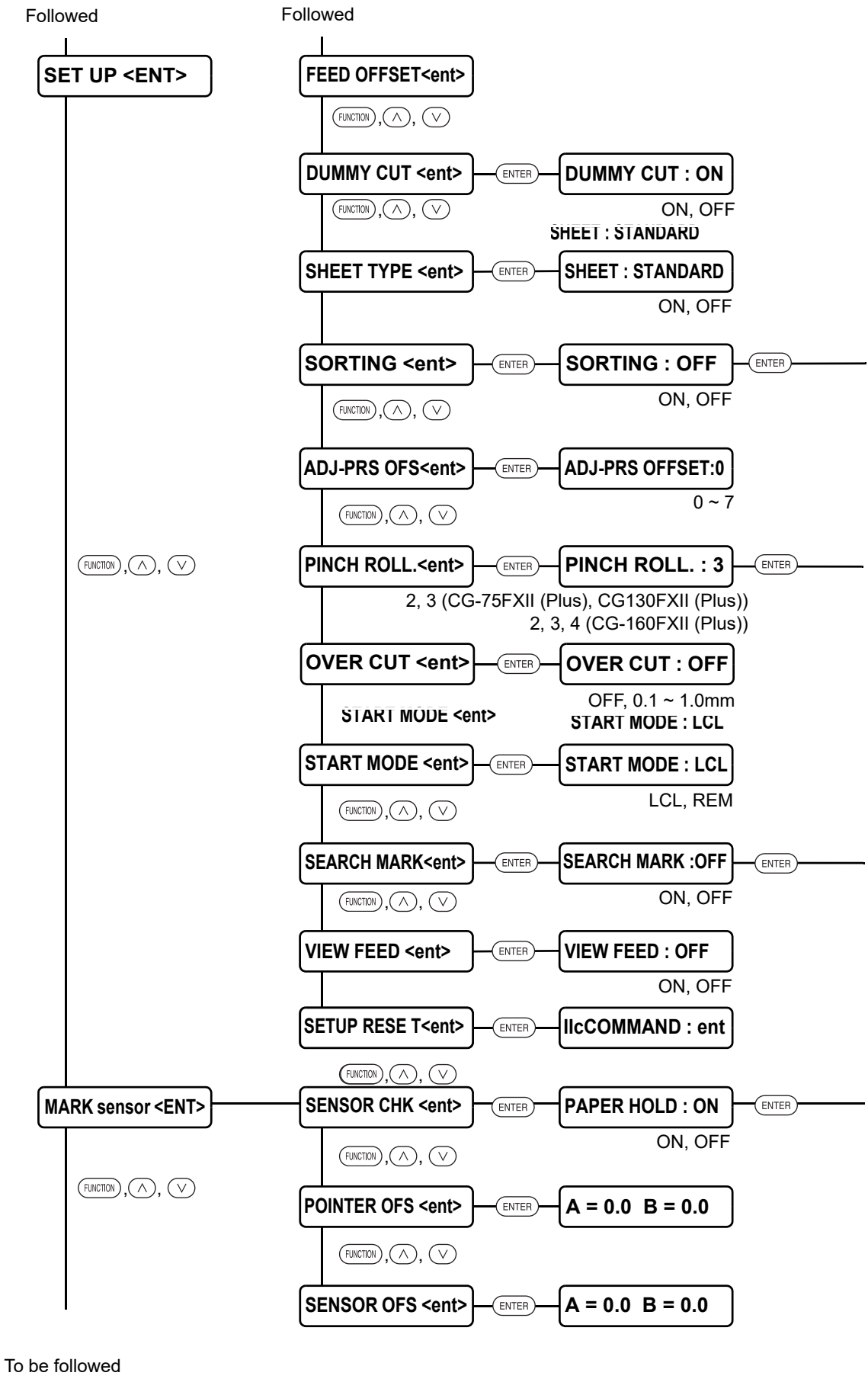
Followed
Followed
SET UP <ENT>
FEED OFFSET<ent>
FUNCTION, ∧, ∨
DUMMY CUT <ent>
ENTER
DUMMY CUT : ON
FUNCTION, ∧, ∨
ON, OFF
SHEET : STANDARD
SHEET TYPE <ent>
ENTER
SHEET : STANDARD
ON, OFF
SORTING <ent>
ENTER
SORTING : OFF
ENTER
FUNCTION, ∧, ∨
ON, OFF
ADJ-PRS OFS<ent>
ENTER
ADJ-PRS OFFSET:0
FUNCTION, ∧, ∨
0 ~ 7
FUNCTION, ∧, ∨
PINCH ROLL.<ent>
ENTER
PINCH ROLL. : 3
ENTER
2, 3 (CG-75FXII (Plus), CG130FXII (Plus))
2, 3, 4 (CG-160FXII (Plus))
OVER CUT <ent>
ENTER
OVER CUT : OFF
OFF, 0.1 ~ 1.0mm
START MODE <ent>
START MODE : LCL
START MODE <ent>
ENTER
START MODE : LCL
FUNCTION, ∧, ∨
LCL, REM
SEARCH MARK<ent>
ENTER
SEARCH MARK :OFF
ENTER
FUNCTION, ∧, ∨
ON, OFF
VIEW FEED <ent>
ENTER
VIEW FEED : OFF
ON, OFF
SETUP RESE T<ent>
ENTER
IIcCOMMAND : ent
FUNCTION, ∧, ∨
MARK sensor <ENT>
SENSOR CHK <ent>
ENTER
PAPER HOLD : ON
ENTER
FUNCTION, ∧, ∨
ON, OFF
FUNCTION, ∧, ∨
POINTER OFS <ent>
ENTER
A = 0.0 B = 0.0
FUNCTION, ∧, ∨
SENSOR OFS <ent>
ENTER
A = 0.0 B = 0.0
To be followed

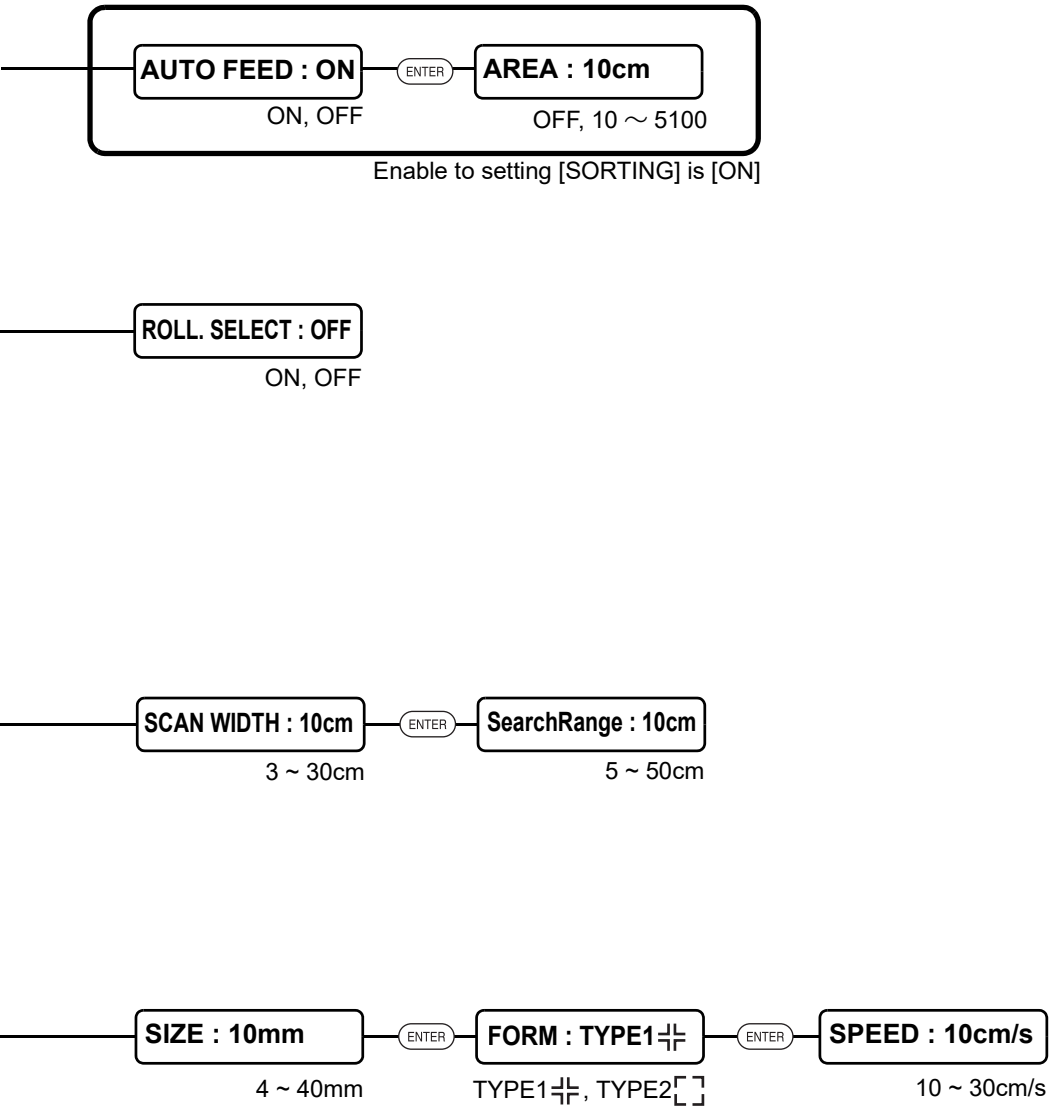
AUTO FEED : ON
ON, OFF
ENTER
AREA : 10cm
OFF, 10 ～ 5100
Enable to setting [SORTING] is [ON]
ROLL. SELECT : OFF
ON, OFF
SCAN WIDTH : 10cm
3 ~ 30cm
ENTER
SearchRange : 10cm
5 ~ 50cm
SIZE : 10mm
4 ~ 40mm
ENTER
FORM : TYPE1
TYPE1, TYPE2
ENTER
SPEED : 10cm/s
10 ~ 30cm/s

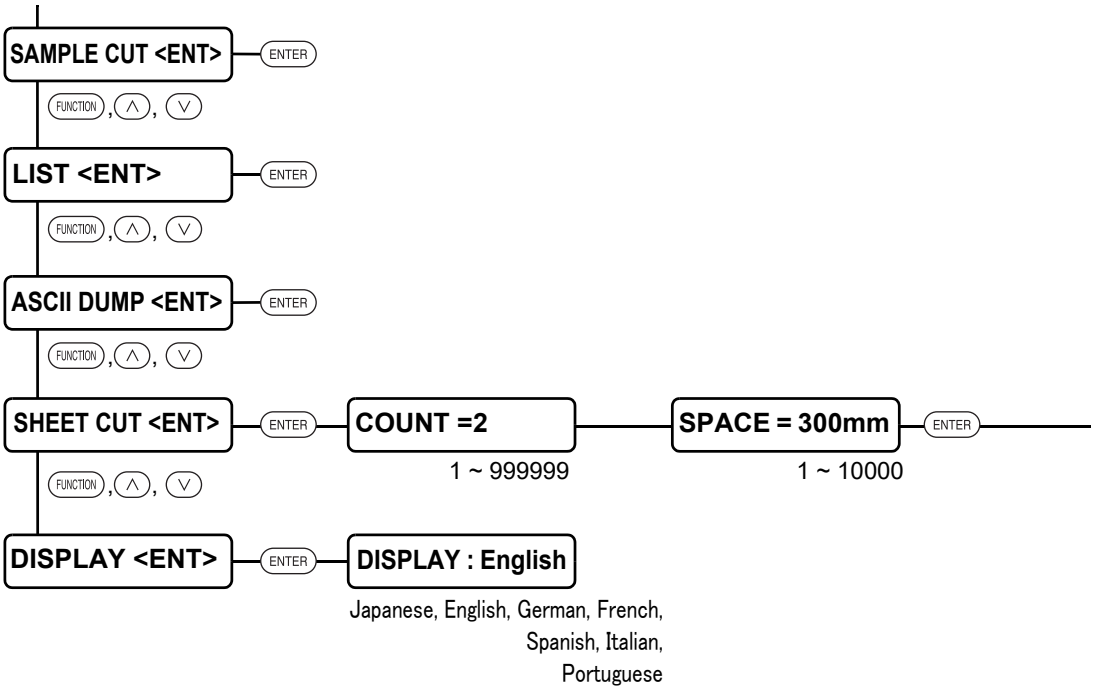
SAMPLE CUT <ENT>
ENTER
FUNCTION, ∧, ∨
LIST <ENT>
ENTER
FUNCTION, ∧, ∨
ASCII DUMP <ENT>
ENTER
FUNCTION, ∧, ∨
SHEET CUT <ENT>
ENTER
COUNT =2
1 ~ 999999
SPACE = 300mm
1 ~ 10000
ENTER
FUNCTION, ∧, ∨
DISPLAY <ENT>
ENTER
DISPLAY : English
Japanese, English, German, French,
Spanish, Italian,
Portuguese

FRONT CUToff = 0

0 ~ 30

CG-FXII Operation Manual

September, 2026

MIMAKI ENGINEERING CO.,LTD.
2182-3 Shigeno-otsu, Tomi-shi, Nagano 389-0512 JAPAN

D201812-34-20102026

KW

©MIMAKI ENGINEERING CO., LTD. 2016